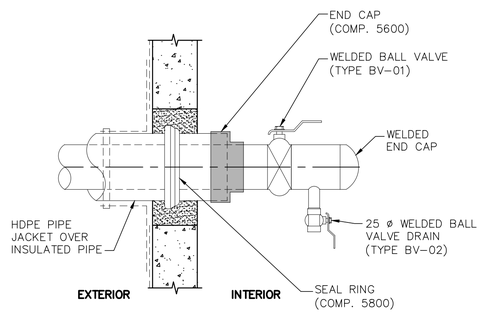

NOTE:
BUILDING PENETRATION MUST BE CORED.

D.E.S. PIPE PENETRATION AND TERMINATION IN BUILDING DETAIL (A)
N.T.S.

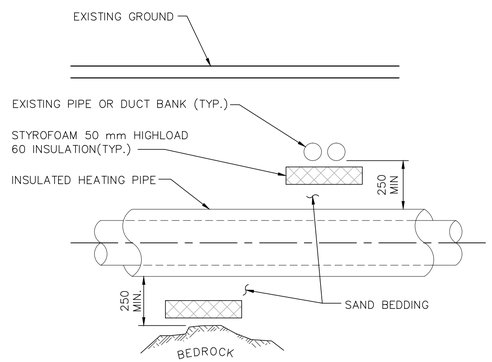

NOTES:
1. INSTALL 50 mm STYROFOAM HIGHLOAD 60 INSULATION OR EQUIVALENT BETWEEN ANY EXISTING FEATURE AND THE DISTRIBUTION HEATING PIPES. (SERVICES, DUCT BANKS, ROCK, CONCRETE, ETC.)
2. DRITHERM OR APPROVED EQUAL SHALL BE UTILIZED WITHSTEAM OR CONDENSATE PIPING CROSSINGS.

D.E.S. HEATING PIPE CLEARANCES (C)
N.T.S.

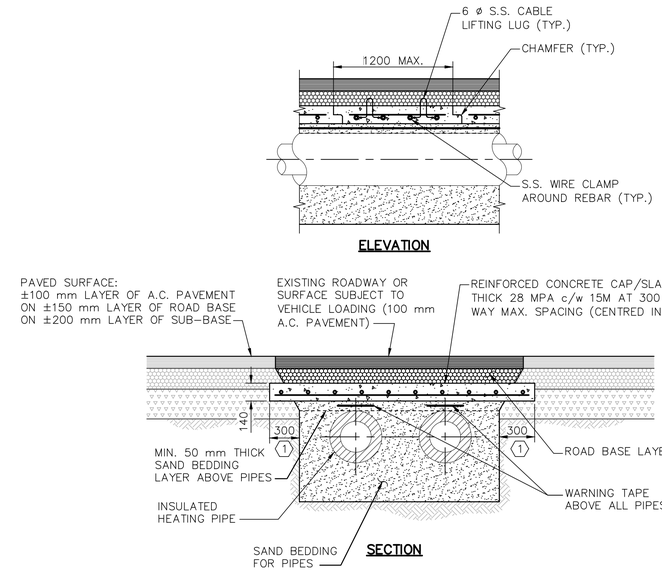

D.E.S. HEATING PIPE REINFORCED CONCRETE CAP DETAIL (B)
N.T.S.

DETAIL 'J' GENERAL NOTES:

1. THE CONTRACT DOCUMENTS ARE BASED THE BEST AVAILABLE RECORD INFORMATION AVAILABLE FOR ALL EXISTING INFRASTRUCTURE. ACTUAL ONSITE CONDITIONS MAY VARY. THE CONTRACTOR SHALL IMMEDIATELY INFORM THE ENGINEER OF ANY SIGNIFICANT VARIATIONS FROM THE INFORMATION PROVIDED.
2. MINOR MODIFICATIONS SHALL BE REQUIRED TO THE WORK INDICATED ON THESE DRAWINGS TO REFLECT ACTUAL SITE CONDITIONS. THE CONTRACTOR SHALL COOPERATE WITH THE ENGINEER IN THIS REGARD. MINOR MODIFICATIONS SHALL BECOME THE RESPONSIBILITY OF THE CONTRACTOR AND SHALL NOT RESULT IN A CHANGE IN CONTRACT PRICE.
3. ENSURE THAT ALL NECESSARY JOB DIMENSIONS ARE TAKEN AND ALL TRADES ARE COORDINATED FOR THE PROPER EXECUTION OF THE WORK. THE CONTRACTOR SHALL ASSUME COMPLETE RESPONSIBILITY FOR THE ACCURACY AND COMPLETENESS OF SUCH DIMENSIONS AND FOR COORDINATION.
4. PRIOR TO FABRICATION OF ANY STRUCTURAL MEMBERS, THE CONTRACTOR SHALL COMPLETE THIS SITE REVIEW OF CRITICAL "TIE–IN" DIMENSIONS AND CONFIRM ALL DIMENSIONS TO ENSURE PROPER FIT OF NEW WORK TO EXISTING. REPORT ANY DISCREPANCIES TO THE ENGINEER PRIOR TO STARTING ANY WORK.
5. COMMENCEMENT OF CONSTRUCTION OR ANY PART THEREOF CONSTITUTES ACCEPTANCE OF EXISTING CONDITIONS AND MEANS DIMENSIONS AND ELEVATIONS HAVE BEEN CONSIDERED, VERIFIED AND ARE ACCEPTABLE.
6. THE CORING OR CUTTING OF OPENINGS AND HOLES SHOWN ON THE DRAWINGS THROUGH THE EXISTING STRUCTURE SHALL NOT CUT ANY REINFORCING BARS. THE CONTRACTOR SHALL LOCATE THE POSITION OF EXISTING REINFORCING BARS IN THE VICINITY OF THE HOLES AND SLEEVES TO BE CUT OR CORED, AND THE HOLES AND SLEEVES SHALL BE LOCATED TO AVOID CUTTING OF REINFORCING BARS. WHERE THIS IS NOT POSSIBLE, IT SHALL BE REPORTED TO THE ENGINEER FOR REVIEW.

DETAIL 'J' WATERPROOFING NOTES:

1. WATERPROOFING SHALL BE SOPREMA ALSAN RS 230 FLASH, 2 LAYERS COMPLETE WITH ALSAN RS FLEECE FLASHING REINFORCEMENT. INSTALL ACCORDING TO MANUFACTURER'S RECOMMENDATIONS.
2. WEATHER CONDITION REQUIREMENTS (TO BE CONFIRMED WITH MANUFACTURER):
   2.1. ALSAN RS 230 FLASH SHALL BE INSTALLED ON A DRY SUPPORT, AT A TEMPERATURE BETWEEN 5 AND 35 DEGREES CELSIUS.
   2.2. ALSAN RS 230 FLASH SHALL NOT BE INSTALLED WHEN RAIN IS FORECASTED WITHIN 12 HOURS OF INSTALLATION OR WHEN THERE IS A RISK OF EXPOSURE TO ANY TYPE OF WATER WITHIN 12 HOURS OF INSTALLATION.
3. SUBMIT APPROVED APPLICATOR CARD TO ENGINEER FOR REVIEW PRIOR TO INSTALLATION.
4. PIPE SURFACE PREPARATION: CONTRACTOR SHALL PERFORM AN ABRASION TEST ON THE PIPE JACKET AND SELECT A PRIMER BASED ON THE RESULTS OF THE TEST AND AS RECOMMENDED BY THE MANUFACTURER. NOTIFY ENGINEER OF THE PRIMER SELECTED PRIOR TO APPLICATION.
5. CONCRETE SURFACE PREPARATION: SURFACE SHALL BE DUST–FREE AND HAVE NO OTHER SUBSTANCES THAT CAN INTERFERE WITH THE ADHERENCE. ANY RESIDUE SHALL BE REMOVED BY CLEANING, SANDING OR HIGH PRESSURE WASHING.
6. CONTRACTOR TO CONFIRM EXISTING FOUNDATION WALL WATERPROOFING / DAMP–PROOFING SYSTEM AFTER EXCAVATION AND PRIOR TO NEW PIPE PENETRATION WATERPROOFING. CONTRACTOR SHALL NOTIFY THE ENGINEER TO CONFIRM THE COMPATIBILITY OF THE PROPOSED WATERPROOFING SYSTEM.

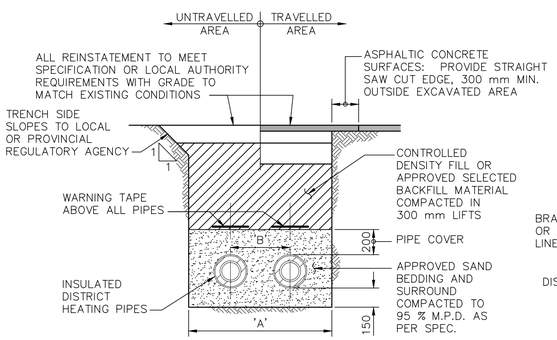

D.E.S. TYPICAL TRENCH DIMENSIONS						
PIPE SIZE	NPS mm	NPS in	'A' mm	'B' mm	'A' ft–in	'B' ft–in
48.3/110	40 ø	1 1/2 "	800	300	2'–8"	1'–0"
60.3/125	50 ø	2"	825	325	2'–9"	1'–1"
76.1/140	65 ø	2 1/2 "	850	325	2'–10"	1'–1"
88.9/160	80 ø	3"	900	350	3'–0"	1'–2"
114.3/200	100 ø	4"	975	400	3'–3"	1'–4"
139.7/225	125 ø	5"	1025	425	3'–5"	1'–5"
168.3/250	150 ø	6"	1075	450	3'–7"	1'–6"
219.1/315	200 ø	8"	1200	500	4'–0"	1'–8"
273/400	250 ø	10"	1375	600	4'–6"	2'–0"
323.9/450	300 ø	12"	1475	650	4'–10"	2'–2"
355.6/500	350 ø	14"	1600	700	5'–3"	2'–4"
406.4/520	400 ø	16"	1640	720	5'–5"	2'–5"
457.2/560	450 ø	18"	1720	760	5'–8"	2'–6"

D.E.S. TYPICAL TRENCH SECTION OF PARALLEL DISTRICT HEATING PIPES (G)
N.T.S.

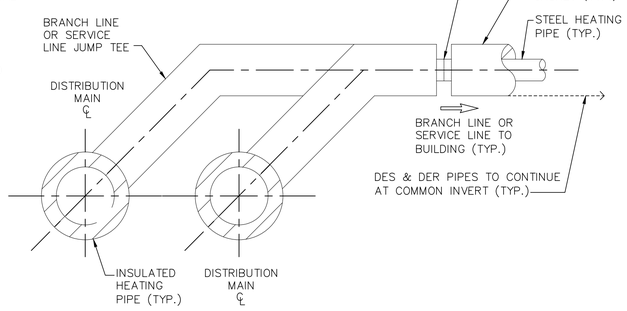

NOTES:
1. ALL BRANCH LINE AND SERVICE LINE PIPE CROSSINGS SHALL PASS UNDER / OVER THE NEAR SIDE DISTRIBUTION MAIN PIPE WITH 45° JUMP TEES WITH WELDED DISTANCE PIECES TO SUIT.
2. BRANCH LINE AND SERVICE LINE PIPES TO CONTINUE AT COMMON INVERT AT LINE AND GRADE AS ILLUSTRATED ON PLAN AND PROFILE.

D.E.S. BRANCH LINE AND SERVICE LINE PIPE CROSSING AT DISTRIBUTION MAIN PIPELINE DETAIL (F)
N.T.S.

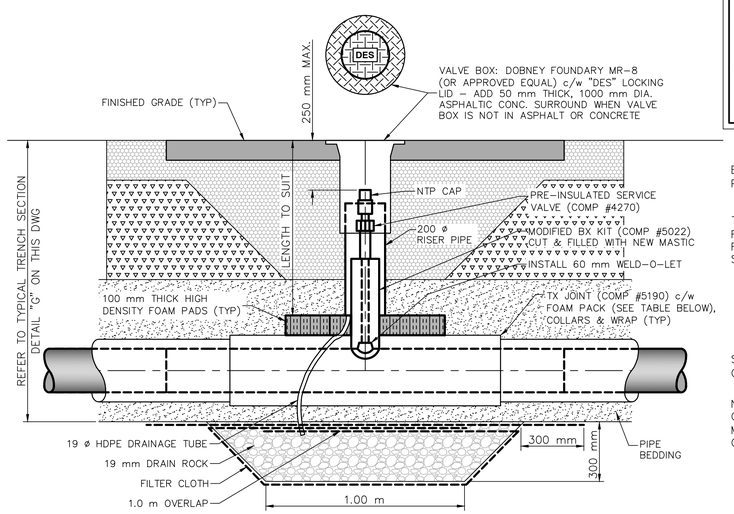

TABLE – FOAM PACK NUMBERS FOR TX BRANCH TEE COUPLINGS							
BRANCH PIPE OUTTER CASING ø (mm)	MAIN PIPE OUTTER CASING ø (mm)						
	250	315	400	450	500	520	560
110	9	11	12	10+11	10+12	10+13	10+13

D.E.S. LOW PROFILE VENT IN VALVE BOX ASSEMBLY DETAIL (E)
N.T.S.

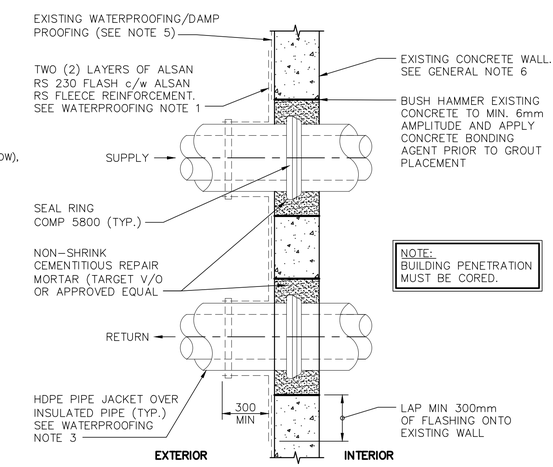

NOTE:
BUILDING PENETRATION MUST BE CORED.

WATERTIGHT CONCRETE PENETRATION DETAIL (PLAN VIEW) (D)
N.T.S.

ISSUED INFORMATION	Issued for	Issue	Date	Issued By
	Reference			
	Approvals	A0	Jul.26/16	AMF
	Tender			
	Permits			
	Construction	C0	Sep.26/16	AMF
	Record Drawings			

REVISION INFORMATION	Rev. No.	Date	Designed	Drawn	Checked	Description of Revision
	0	Jul.26/16	KAW	SB	AMF	ISSUED FOR CLIENT REVIEW
	1	Sep.26/16	EMOS	SB	AMF	ISSUED FOR CONSTRUCTION

The University of British Columbia

PROFESSIONAL ENGINEER – PROVINCE OF BRITISH COLUMBIA – A. M. FAHMY # 35522 – 2016-09-26
Seal

KERR WOOD LEIDAL
consulting engineers

THE UNIVERSITY OF BRITISH COLUMBIA
UBC DISTRICT ENERGY SYSTEM - TALL WOOD BLDG.
STANDARD DETAILS - SHEET 1

KWL Project No.	2108-012	Scale	AS SHOWN
Sheet	3 of 4	Rev. No.	1
Client: The University of British Columbia			

H91
Drawing Number

AT FULL SIZE THIS BAR MEASURES 100mm. ALL SCALES REFERENCED TO FULL SIZE.

Q:\2100-2199\2108-012\501-Drawings\a_Production_Dwgs\2108012-H91-Rev1.dwg Sep.26/16 2:30 PM