Client: THE UNIVERSITY OF BRITISH COLUMBIA

6200 University Blvd
Vancouver, BC V6T 1Z4

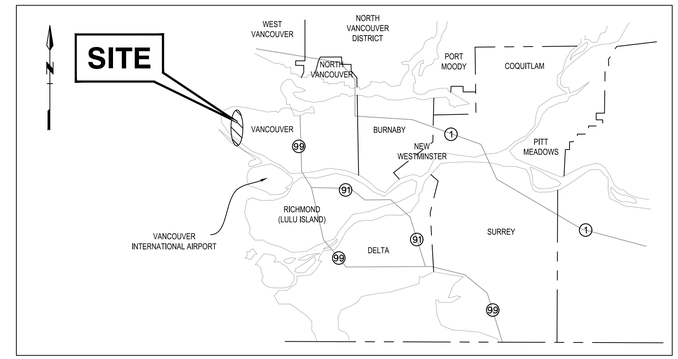

LOCATION PLAN
N.T.S.

SOUTH CAMPUS WORKS YARD

ISSUED FOR
DEVELOPMENT PERMIT
JUNE 13, 2025

Status: ISSUED FOR DEVELOPMENT PERMIT

McElhanney Project No: 2121-01293-00

DWG.No.	DWG. NAME	REV. NO.
	GENERAL	
G000	COVER SHEET	B
	CIVIL	
C001	KEY PLAN, LEGEND, AND GENERAL NOTES	B
C002	REMOVALS PLAN	B
C003	CONTEXT PLAN	A
C101	SITE LAYOUT PLAN - NURSERIES ROAD	B
C102	SITE LAYOUT PLAN - WAREHOUSE YARD	B
C103	SITE LAYOUT PLAN - MATERIAL RECOVERY FACILITY	B
C200	OVERALL UTILITY PLAN	B
C201	GRADING AND DRAINAGE PLAN - NURSERIES ROAD	B
C202	GRADING AND DRAINAGE PLAN - WAREHOUSE YARD	B
C203	GRADING AND DRAINAGE PLAN - MATERIAL RECOVERY FACILITY	B
C204	DRAINAGE DETAILS	B
C301	WATER SERVICING PLAN AND PROFILE	B
C302	WATER SERVICE DETAILS	B
C401	SANITARY SERVICE PLAN AND PROFILE	B
C402	SANITARY SERVICE DETAILS	B
C403	DESIGN ELEMENT INFORMATION	B
C404	DESIGN ELEMENT ILLUSTRATION	B
C501	TYPICAL SECTIONS	A

DWG.No.	DWG. NAME	REV. NO.
	ELECTRICAL	
E100	SYMBOLS AND DRAWING INDEX	B
E101	TYPICAL DETAILS & SCHEDULE	B
E102	SINGLE LINE DIAGRAM	B
E103	SITE LAYOUTS	B
E900	SPECIFICATIONS	B

DWG.No.	DWG. NAME	REV. NO.
	MECHANICAL	
M000	SITE PLAN, NOTES, LEGENDS, AND DRAWING LIST	B
M001	MECHANICAL EQUIPMENT SCHEDULES AND MOTORLIST	B
M002	MECHANICAL EQUIPMENT SCHEDULES	
M100	WAREHOUSE YARD SITE LAYOUT PLAN	B
M101	MATERIAL RECOVERY FACILITY LAYOUT PLAN	B
M200	DETAILS	B
M201	DETAILS	B
M202	DETAILS	B
M300	SPECIFICATIONS	B

DWG.No.	DWG. NAME	REV. NO.
	STRUCTURAL	
S101	BULK MATERIAL STORAGE AREAS - FOUNDATION DETAILS	B
S102	MECHANICAL ROOM, EMERGENCY EYEWASH, AND PESTICIDE SHED - FOUNDATION DETAILS	B
S103	WEIGH SCALE - FOUNDATION DETAILS	B
S104	GATE HOUSE - FOUNDATION DETAILS	B
S105	WASHBAY - FOUNDATION DETAILS	B
S106	EV CHARGING STATION - FOUNDATION DETAILS	B
S107	COVERED STORAGE AREA - FOUNDATION DETAILS	B
S108	DIESEL TANKS - FOUNDATION DETAILS	B
S109	CNG STATION - FOUNDATION DETAILS	B

McElhanney
Suite 200
658 Beatty Street
Vancouver BC
Canada V6B 1C1
T 604 683 8521

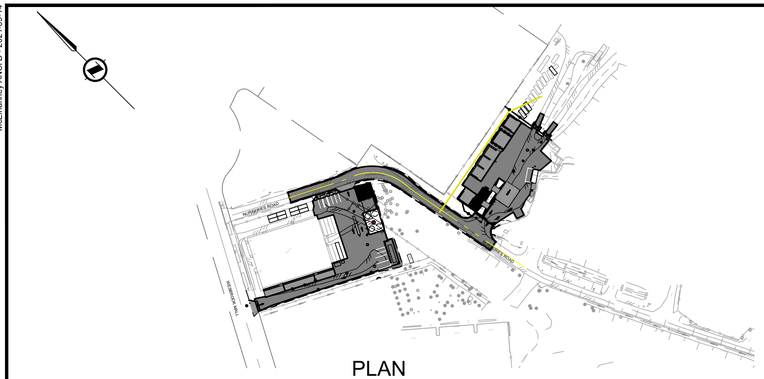

PLAN
1:2000

GENERAL NOTES

1. ALL DIMENSIONS IN METRES UNLESS NOTED OTHERWISE.
2. EXISTING BUILDING DIMENSIONS SHOWN ARE ROOF OUTLINES.
3. ALL CONSTRUCTION TO BE COMPLETED IN ACCORDANCE WITH THE EDITION OF THE NATIONAL BUILDING CODE OF CANADA, NATIONAL PLUMBING CODE OF CANADA, MASTER MUNICIPAL CONSTRUCTION DOCUMENTS AND SUPPLEMENTS 2019 EDITION, MMCD DESIGN GUIDELINES, AND UBC TECHNICAL GUIDELINES.
4. CONTACT BC 1 CALL (604-257-1900) TO OBTAIN UTILITY LOCATION INFORMATION 1-2 WEEKS PRIOR TO CONSTRUCTION.
5. USE CAUTION WHEN WORKING NEAR EXISTING SERVICES AND INFRASTRUCTURE. ALL SERVICES AND INFRASTRUCTURE DISTURBED DURING CONSTRUCTION SHALL BE RESTORED TO ORIGINAL OR BETTER CONDITION AND TO THE SATISFACTION OF THE ENGINEER.
6. REPORT ANY DISCREPANCIES TO THE CONSULTANT PRIOR TO COMMENCEMENT OF CONSTRUCTION.
7. THE EXISTENCE, LOCATION AND ELEVATION OF UTILITIES AND/OR CONCEALED STRUCTURES AT THE PROJECT SITE ARE NOT GUARANTEED BY MCELHANNEY LTD. THE CONTRACTOR IS RESPONSIBLE FOR DETERMINING THE EXISTENCE, LOCATION AND ELEVATION OF ALL SUCH UTILITIES AND/OR STRUCTURES AND IS RESPONSIBLE FOR NOTIFYING THE APPROPRIATE COMPANY, DEPARTMENT OR PERSON(S) OF ITS INTENTION TO CARRY OUT ITS OPERATIONS.
8. CONTRACTOR SHALL PROTECT EXISTING UTILITIES DURING CONSTRUCTION.
9. THE CONTRACTOR IS RESPONSIBLE FOR TRAFFIC CONTROL DURING CONSTRUCTION. ALL TRAFFIC CONTROL SHALL BE APPROVED BY VANCOUVER AUTHORITY AND CONSULTANT PRIOR TO CONSTRUCTION.
10. DISPOSE OF EXCAVATED MATERIALS TO DESIGNATED STOCKPILE LOCATION OR DISPOSAL FACILITIES OFF-SITE AS NOTED ON THE DRAWINGS.
11. THE CONTRACTOR SHALL MAINTAIN THE SAFE PASSAGE OF TRAFFIC AT ALL TIMES DURING CONSTRUCTION.
12. CONTRACTOR IS RESPONSIBLE FOR OBTAINING ALL OF THE NECESSARY PERMITS FROM UBC.
13. CONTRACTOR SHALL HIRE AN INDEPENDENT TESTING AGENCY AND PROVIDE A QUALITY MANAGEMENT PLAN (QMP). THE QMP SHALL BE SUBMITTED PRIOR TO THE START OF ANY WORK AND NEEDS TO REVIEWED AND APPROVED BY THE ENGINEER.
14. THE QUALITY MANAGEMENT PLAN SHALL SHOW REQUIRED HOLD POINTS, TESTING REQUIREMENTS, AND PROCURE FOR CORRECTIVE ACTIONS.

SURVEY NOTES:

1. GROUND SURVEY WAS COMPLETED ON DEC. 21, 2023, JAN. 18-19, 2024 AND JAN. 21 AND 29 2025.
2. LOCAL GROUND COORDINATES ARE DERIVED FROM DUAL FREQUENCY GPS DIFFERENTIAL CARRIER PHASE OBSERVATIONS. TO CONVERT TO UTM ZONE 10 NAD83 (CSRS), FIRST APPLY THE FOLLOWING SHIFT:

   NORTHING = +5402194.83
   EASTING = +450194.42

   THEN MULTIPLY BY THE COMBINED SCALE FACTOR OF 0.9995978 AROUND POINT #6886.
3. THIS SURVEY SHALL NOT BE USED TO DEFINE PROPERTY LINES OR PROPERTY CORNERS.

REMOVAL AND RESTORATION NOTES:
REF. MMCD SPECS. SECTIONS 31 11 01, 31 11 41 AND 31 22 01

1. ALL EXISTING ASPHALT, CONCRETE, FENCING, OR OTHER UNSUITABLE MATERIAL DENOTED AS BEING REMOVED ON CONTRACT DRAWINGS SHALL BE DISPOSED OF OFFSITE AT A CONTRACTOR PROVIDED DISPOSAL SITE UNLESS NOTED OTHERWISE.
2. ANY EXCAVATED MATERIAL, DEBRIS, WASTE, AND EXCESS MATERIALS IDENTIFIED TO BE REMOVED FROM SITE AND DISPOSED OF OFF SITE SHALL BE DONE IN ACCORDANCE WITH FEDERAL, PROVINCIAL, AND MUNICIPAL REGULATIONS.
3. WHERE NO IMPROVEMENTS OR MODIFICATIONS ARE PROPOSED UNDER THIS CONTRACT, THE EXISTING SITE AND ROADWAY SHALL BE KEPT CLEAN AND CLEAR FOR THE DURATION OF CONSTRUCTION AND LEFT IN THE SAME CONDITION AS IT WAS PRIOR TO CONSTRUCTION.
4. ANY DAMAGE TO EXISTING INFRASTRUCTURE SHALL BE REPAIRED OR REPLACED AT CONTRACTOR'S EXPENSE.
5. EXISTING MANHOLES, VALVE BOXES, JUNCTION BOXES, ETC. TO REMAIN SHALL BE ADJUSTED TO FINAL GRADE ELEVATIONS, UNLESS NOTED OTHERWISE. ENSURE THERE IS NO EXCESSIVE USE OF MH RISER RINGS THAT COULD ADVERSELY IMPACT ABILITY TO ENTER THE MH/REACH THE RUNGS.
6. REMOVAL OF ALL LANDSCAPING MATERIALS SHALL BE COORDINATED WITH UBC.
7. TREE PROTECTION AND REMOVAL SHALL BE COORDINATED WITH DIAMOND HEAD. BIRD AND BIRD NESTING SWEEPS WILL NEED TO BE DONE BY THE QUALIFIED PROFESSIONAL PRIOR OF CLEARING AND TREE REMOVAL.

EARTHWORKS NOTES:
REF. MMCD SPECS. SECTIONS 31 05, 31 06, 31 07, 31 08, 31 09, 31 10, 31 11, 31 12, 31 13, 31 14,
31 15, 31 16, 31 17, 31 18, 31 19, 31 20, 31 21, 31 22, 31 23 AND 31 24.

1. REFER TO GEOWEST'S GEOTECHNICAL REPORTS DATED MARCH 1, 2024, FOR ON-SITE AND NURSERIES ROAD SITE PREPARATION DETAILS.
2. STRIPPING SHALL INCLUDE TOPSOIL, VEGETATION, ORGANIC SOILS, LOOSE, SOFT, AND DELETERIOUS MATERIAL, OR ANY OTHER MATERIAL DEEMED NOT SUITABLE FOR THE EMBANKMENT SUBGRADE. THE STRIPPED OR EXCAVATED SUBGRADE SHALL BE INSPECTED BY THE GEOTECHNICAL ENGINEER PRIOR TO THE PLACEMENT OF ANY BACKFILL, NONWOVEN GEOTEXTILE OR PAVEMENT STRUCTURE.
3. THE SITE SHOULD BE GRADED TO DIRECT ANY SURFACE WATER AWAY FROM THE EXCAVATION. IF PERCHED WATER LAYERS ARE ENCOUNTERED, WATER SHALL BE READILY CONTROLLED VIA A SYSTEM OF SUMP AND SUMP PUMPS. MACHINERY AND TRUCKS SHALL NOT WORK DIRECTLY ON THE SUBGRADE OR CLOSE TO THE CREST OF THE EMBANKMENT SLOPE.
4. TEMPORARY SLOPE CUTS SHOULD BE COVERED WITH POLY SHEETING DURING THE ENTIRE WORK DURATION. ALL SLOPE CUTS, EXCAVATIONS, AND TRENCHING SHALL ADHERE TO WORKSAFE BC WORK STANDARDS AND OCCUPATIONAL HEALTH AND SAFETY REGULATIONS.
5. ANY GRADE REINSTATEMENT UNDERLYING THE PAVEMENT STRUCTURE SHOULD BE COMPLETED WITH ENGINEERED FILL, AS DEFINED IN THE GEOTECHNICAL REPORTS.
6. COMPACT AND PROOF ROLL EXPOSED SUBGRADES USING A LOADED TRUCK OR HEAVY CONSTRUCTION EQUIPMENT, AND OBSERVE THE SURFACE DEFLECTION AND THE DEVELOPMENT OF RUTTING. ANY AREAS WHERE RUTTING, CRACK, OR OTHER DEFORMATIONS OCCUR SHOULD BE EXCAVATED TO MEET COMPETENT SUBGRADE AND REPLACED WITH ENGINEERED FILL.

PAVEMENT NOTES:
REF. MMCD SPECS. SECTIONS 31 05 17, 31 22 16, AND 32 01 TO 32 14.

1. CONTRACTOR TO SUPPLY DESIGN CONSULTANT WITH SIEVE ANALYSIS, MATERIAL TEST REPORTS AND PROCTOR DENSITY REPORTS OF ALL ASPHALT, GRANULAR MATERIALS, AND TACK COAT MATERIAL PRIOR TO PROCUREMENT FOR REVIEW AND APPROVAL.
2. CONTRACTOR WILL GIVE CONSULTANT AT LEAST 48 HOURS NOTICE PRIOR TO THE SUBBASE AND BASE LAYER PROOF ROLLS.
3. ALL SAW-CUTS INTO EXISTING ASPHALT REQUIRED FOR TRENCHING OR TIE-INS SHALL BE VERTICAL AND MATCH THE EXISTING ASPHALT THICKNESS. ALL NEW PAVEMENT SHALL HAVE CLEAN AND STRAIGHT SAWCUT.
4. SUBBASE MATERIAL SHALL BE 75MM MINUS CRUSHED SAND AND GRAVEL MATERIAL COMPACTED TO 95% MODIFIED PROCTOR DENSITY.
5. BASE MATERIAL SHALL BE 19mm MINUS CRUSHED GRAVEL BASE WITH GRADATION REQUIREMENTS BEING EQUIVALENT OR EXCEEDING 19mm CRUSHED GRANULAR BASE AS PER MMCD 31 05 17 AND SHALL BE PLACED IN ACCORDANCE WITH MMCD 32 11 23, COMPACTED TO 95% MODIFIED PROCTOR DENSITY.
6. TACK COAT AND PRIME MATERIAL AND PLACEMENT SHALL BE AS PER MMCD 32 12 13.
7. CONTRACTOR TO ENSURE THAT EXISTING PAVEMENT STRUCTURES ADJACENT TO NEW PAVEMENT REPLACEMENT IS NOT UNDERMINED DURING EXCAVATION.
8. FULL DEPTH RECLAMATION OF PAVEMENT STRUCTURE SHALL BE PERFORMED IN ACCORDANCE TO MMCD 32 01 16.8.
9. EXISTING VALVE BOXES, MANHOLES, ETC. WITHIN THE ROAD ALLOWANCE MUST BE ADJUSTED TO SUIT THE PROPOSED FINISHED GRADE.
10. ASPHALT PAVING SHALL BE IN ACCORDANCE WITH MASTER MUNICIPAL SPECIFICATIONS SECTION 32 12 16 HOT-MIX ASPHALT CONCRETE PAVING.

WATER NOTES
REF. MMCD SPECS. SECTION 33 11 01

1. HAND DIG OR HYDROVAC WHEN EXCAVATING WITHIN 10m OF EXISTING UTILITIES.
2. ALL WATER MAIN AND SERVICE MAIN TO BE FULLY RESTRAINED AT MECHANICAL JOINT AND FITTING LOCATIONS NOTED ON THE DRAWINGS.
3. PIPE TRENCH, BEDDING AND SURROUND DIMENSIONS SHALL BE AS PER MMCD DETAIL G4 NOTED IN THIS DRAWING SET.
4. CONTRACTOR TO SUPPLY CONSULTANT WITH SHOP DRAWINGS FOR ALL WATER MAIN, FITTINGS, VALVES AND OTHER APPURTENANCES FOR APPROVAL PRIOR TO PROCUREMENT FOR REVIEW AND APPROVAL.
5. ANY BURIED METALLIC HARDWARE AND/OR COMPONENTS SHALL BE 316 STAINLESS STEEL WRAPPED WITH DENSO OUTERWRAP.
6. WATER SERVICE CONNECTIONS TO BE POLYETHYLENE TO AWWA C901 PRESSURE RATING 160 TUBING C/W #10 TRACER WIRE ATTACHED.
7. MINIMUM COVER OVER WATER PIPE TO BE NO LESS THAN 1.0m UNLESS NOTED OTHERWISE IN THE CONTRACT DRAWINGS.
8. ENTIRE WATER SERVICE TO BE FLUSHED AND CHLORINATED PER AWWA C651-23. BACTERIOLOGICAL TESTING TO BE PROVIDED BY A LAB APPROVED BY THE PROVINCIAL HEALTH OFFICER FOR DRINKING WATER.
9. PROVIDE COMPLETE, FULLY TESTED BY THE AUTHORITY HAVING JURISDICTION AND OPERATIONAL SYSTEMS TO MEET THE REQUIREMENTS DESCRIBED HEREIN AND IN COMPLETE ACCORDANCE WITH ALL APPLICABLE CODES AND ORDINANCES. THE CONTRACTOR SHALL PROVIDE LABOR, MATERIALS, AND EQUIPMENT TO COMPLETE THE WORK AS SPECIFIED.
10. FOLLOW MANUFACTURE'S RECOMMENDED INSTALLATION DETAILS AND PROCEDURES FOR EQUIPMENT, SUPPLEMENTED BY THE REQUIREMENTS OF THE SPECIFICATIONS. THESE DRAWINGS ARE NOT TO BE CONSIDERED DETAILED INSTALLATION INSTRUCTIONS.
11. FIELD VERIFY ALL SITE DIMENSIONS PRIOR TO ANY FABRICATION AND INSTALLATION OF EQUIPMENT OR MATERIALS. NO ADDITIONAL CHARGE WILL BE ENTERTAINED FOR FAILURE TO VERIFY THESE DIMENSIONS ON SITE.
12. COORDINATE WITH ALL OTHER SUB-TRADES AT THE START AND THROUGHOUT THE PROJECT TO PREVENT AVOIDABLE CONFLICTS. IF THERE IS A CONCERN OF CONFLICT, COORDINATE THROUGH GENERAL CONTRACTOR. IF CONFLICTS ARE UNAVOIDABLE, CONTACT CONSULTANTS IMMEDIATELY TO ASSIST WITH A SOLUTION.
13. ALL TRENCHING AND EXCAVATIONS SHALL BE CARRIED OUT IN A MANNER RECOMMENDED BY THE WORKERS' COMPENSATION BOARD OF BRITISH COLUMBIA, OR AS NECESSARY TO PROTECT LIFE, PROPERTY, STRUCTURES ADJACENT TO THE WORK AND THE WORK ITSELF.
14. CONFIRM LOCATION AND SIZES OF EXISTING WATERMAINS & SERVICES PRIOR TO CONSTRUCTION. NOTIFY THE CONSULTANT OF ANY DISCREPANCIES WITH THE DRAWINGS.
15. ALL OR ANY EXISTING UNDERGROUND UTILITIES ARE NOT NECESSARILY SHOWN. THE CONTRACTOR IS TO VERIFY UTILITY LOCATIONS PRIOR TO EXCAVATION.

STORM NOTES
REF. MMCD SPECS. SECTIONS 33 40 01 AND 33 44 01

1. HAND DIG OR HYDROVAC WHEN EXCAVATING WITHIN 0.5m OF EXISTING UTILITIES.
2. HORIZONTAL TOLERANCE SHALL BE PLUS OR MINUS 50mm FROM SPECIFIED ALIGNMENT. VERTICAL TOLERANCE SHALL BE PLUS OR MINUS 25mm FROM SPECIFIED GRADE.
3. ALL NEW STORM DRAINS SHALL BE VIDEO INSPECTED AS NOTED UNDER MMCD SECTION 33 01 30.1.
4. ALL CONNECTIONS BETWEEN PIPES AND CONCRETE STRUCTURES SHALL BE GASKETED OR NON-SHRINK GROUT WITH APPROVAL BY THE CONTRACTOR ADMINISTRATOR IF GASKET IS NOT APPLICABLE. ALL PIPE JOINTS SHALL BE CLOSED JOINTS. PROVIDE FOR NON-SHRINK GROUT AT INTERIOR AND EXTERIOR OF ALL INTERFACES.
5. PIPE AND BOX TRENCH, BEDDING AND SURROUND DIMENSIONS SHALL BE AS PER MMCD STANDARD DETAIL DRAWING G4.
6. CONTRACTOR TO SUPPLY DESIGN CONSULTANT WITH SHOP DRAWINGS FOR ALL FITTINGS AND MANHOLES PRIOR TO PROCUREMENT FOR REVIEW AND APPROVAL.
7. CONTRACTOR TO SUPPLY CONSULTANT WITH MATERIAL DATA SHEETS OF PIPE BEDDING MATERIAL FOR APPROVAL.
8. ANY BURIED METALLIC HARDWARE AND/OR COMPONENTS SHALL BE 316 STAINLESS STEEL WRAPPED WITH DENSO OUTERWRAP.
9. MANHOLE FRAME AND COVERS TO BE CL625 LOADING. COVER CAST WITHOUT PERFORATION AND COMPLETE WITH TWO 25mm SQUARE LIFTING HOLES. MINIMUM SIZE CLEAR OPENING TO BE 610mm DIAMETER. STEEL HATCHES AND COVERS TO BE GALVANIZED TO CSA G164, MINIMUM ZINC COATING OF 600g/m2.
10. MANHOLE LIDS TO BE EMBOSSED WITH SERVICE TYPE.

SANITARY NOTES
REF. MMCD SPECS. SECTIONS 33 30 01 AND 33 44 01

1. HAND DIG OR HYDROVAC WHEN EXCAVATING WITHIN 0.5m OF EXISTING UTILITIES.
2. VANCOUVER COASTAL HEALTH PERMIT FOR WATER-SANITARY CROSSING REQUIRED.
3. HORIZONTAL TOLERANCE SHALL BE PUS OR MINUS 50mm FROM SPECIFIED ALIGNMENT. VERTICAL TOLERANCE SHALL BE PLUS OR MINUS 25mm FROM SPECIFIED GRADE.
4. ALL TESTING SHALL BE CARRIED OUT BY A QUALIFIED TESTING FIRM APPROVED BY UBC. THE CONTRACTOR WILL BE REQUIRED TO ADVISE THE CONSULTANT AND UBC IN ADVANCE OF THE UNDERTAKING OF ANY TESTING IN ACCORDANCE WITH THE ESTABLISHED UBC PROCEDURES. CCTV REQUIREMENTS TO MMCD 33 01 30.1.
5. ALL NEW SANITARY DRAINS SHALL BE VIDEO INSPECTED. ALL ASSOCIATED COSTS FOR VIDEO TESTING, INCLUDING SUBMISSION OF WRITTEN REPORTS AS WELL AS VIDEO LOGS, WILL BE THE RESPONSIBILITY OF THE CONTRACTOR.
6. ALL CONNECTIONS BETWEEN PIPES AND CONCRETE STRUCTURES SHALL BE GASKETED OR NON-SHRINK GROUT WITH APPROVAL BY THE CONTRACTOR ADMINISTRATOR IF GASKET IS NOT APPLICABLE. ALL PIPE JOINTS SHALL BE CLOSED JOINTS. PIPE TRENCH, BEDDING AND SURROUND DIMENSIONS SHALL BE AS PER MMCD STANDARD DETAIL DRAWING G4.
7. CONTRACTOR TO SUPPLY DESIGN CONSULTANT WITH SHOP DRAWINGS FOR ALL FITTINGS AND MANHOLES PRIOR TO PROCUREMENT FOR REVIEW AND APPROVAL. CONTRACTOR TO SUPPLY CONSULTANT WITH MATERIAL DATA SHEETS OF PIPE BEDDING MATERIAL FOR APPROVAL.
8. ANY BURIED METALLIC HARDWARE AND/OR COMPONENTS SHALL BE 316 STAINLESS STEEL WRAPPED WITH DENSO OUTERWRAP.
9. MANHOLE FRAME AND COVERS TO BE CL625 LOADING. COVER CAST WITHOUT PERFORATION AND COMPLETE WITH TWO 25mm SQUARE LIFTING HOLES. MINIMUM SIZE CLEAR OPENING TO BE 610mm DIAMETER. STEEL HATCHES AND COVERS TO BE GALVANIZED TO CSA G164, MINIMUM ZINC COATING OF 600g/m2.
10. IDENTIFICATION MARKER TAPE TO BE PMS 3415 GREEN PER APWA UNIFORM COLOR CODES AND 300mm ABOVE SANITARY MAIN. MARKER TAPE TO BE CONTINUOUS 75 mm WIDE AND LETTERED PERMANENTLY WITH "SEWAGE PIPE" AT 1m INTERVAL.
11. MANHOLE LIDS TO BE EMBOSSED WITH SERVICE TYPE.
12. WHERE SANITARY FINAL BURIAL DEPTH IS LESS THAN 1m TO CROWN OF PIPE, PIPE DEFLECTIONS ARE NOT PERMITTED. ABSOLUTE MINIMAL PIPE BURIAL FOR SANITARY DR35 PVC PIPE IS 0.3m, INSTALLATION TO CONFORM WITH ASTM D3034 AND MMCD SECTION 33 30 03.
13. PVC PIPE TO BE DR35 AND MEETING ASTM D2312, ASTM D3034 AND CERTIFIED TO CSA B182.2. PIPE JOINTS TO CONFORM TO ASTM D3212 GASKETS TO ASTM F477.
14. ROBAR COUPLERS TO BE DUCTILE IRON CASTINGS TO ASTM A536. FASTENERS TO BE 316 STAINLESS STEEL GROUP 2 TO ASTM F593 OR ASTM F738M, HEAVY HEX STYLE AND COATED WITH ANTI-SIEZE. NUTS TO BE 316 STAINLESS STEEL, GROUP 2 TO ASTM F594 OR ASTM F836M, HEAVY HEX STYLE.

LEGEND

EXISTING		PROPOSED
	PROPERTY LINE	
	LEASE BOUNDARY	
	PAVEMENT EDGE	
	GRAVEL EDGE	
	GRADING LIMIT	
	TOP OF BANK	
	BOTTOM OF BANK	
	FENCE	
	DITCH CENTRELINE	
U/G	UNDERGROUND POWER	E
E	OVERHEAD POWER	
T	COMMUNICATION UNDERGROUND	
G	UNDERGROUND N. GAS	G
W	WATER PIPE	W
S	SANITARY SEWER	S
D	STORM PIPE	D
STORM		
D	STORM MANHOLE	
	OIL-GRIT SEPARATOR	D
	CLEANOUT	
	HEADWALL WINGWALL	
	CULVERT END	
	CATCH BASIN, MANHOLE CATCH BASIN	
WATER		
W	WATER MANHOLE	
	FIRE HYDRANT	
W	WATER VALVE	
SANITARY		
C	COMBINED MANHOLE	
	OIL-WATER SEPARATOR	S
S	SANITARY MANHOLE	
LIGHTING		
	LAMP STANDARD	
POWER		
	POWER GUY WIRE	
	POWER GUY POLE	
	POWER POLE	
	POLE WITH PILASTER	
	POLE WITH TRANSFORMER	
	POLE WITH LIGHT	
J	JUNCTION BOX	JB
	TRANSFORMER	
GAS		
G	GAS VALVE	
CABLE VISION		
C	CABLEVISION SERVICE BOX	
T	COMMUNICATION MANHOLE	
VEGETATION		
	DECIDUOUS TREE	
	CONIFEROUS TREE	
OTHER SITE FEATURES		
	MONITORING WELL	
	BOLLARD	
	SIGN (STEEL POST)	

Rev	Date	Description	Drawn	Design	App'd
B	2025-06-13	ISSUED FOR DEVELOPMENT PERMIT	KY	KY	VT
A	2025-05-16	ISSUED FOR 100% DEVELOPMENT DESIGN	KY	KY	VT

THE UNIVERSITY OF BRITISH COLUMBIA

ORIGINAL DWG SIZE: ANSI D (22" x 34")

McElhanney
Suite 200
858 Beatty Street
Vancouver BC
Canada V6B 1C1
T 604 683 8521

0 1:2,000 100

PRELIMINARY NOT FOR CONSTRUCTION

THIS DRAWING HAS NOT BEEN APPROVED AND MAY CONTAIN ERRORS AND OMISSIONS.

THE UNIVERSITY OF BRITISH COLUMBIA
6200 UNIVERSITY BLVD, VANCOUVER, BC V6T 1Z4

UBC SOUTH CAMPUS WORKS YARD

KEY PLAN, LEGEND, AND GENERAL NOTES

Drawing No. C001

Project Number 2121-01293-00

Rev. B

DESTROY ALL PRINTS BEARING PREVIOUS REVISION

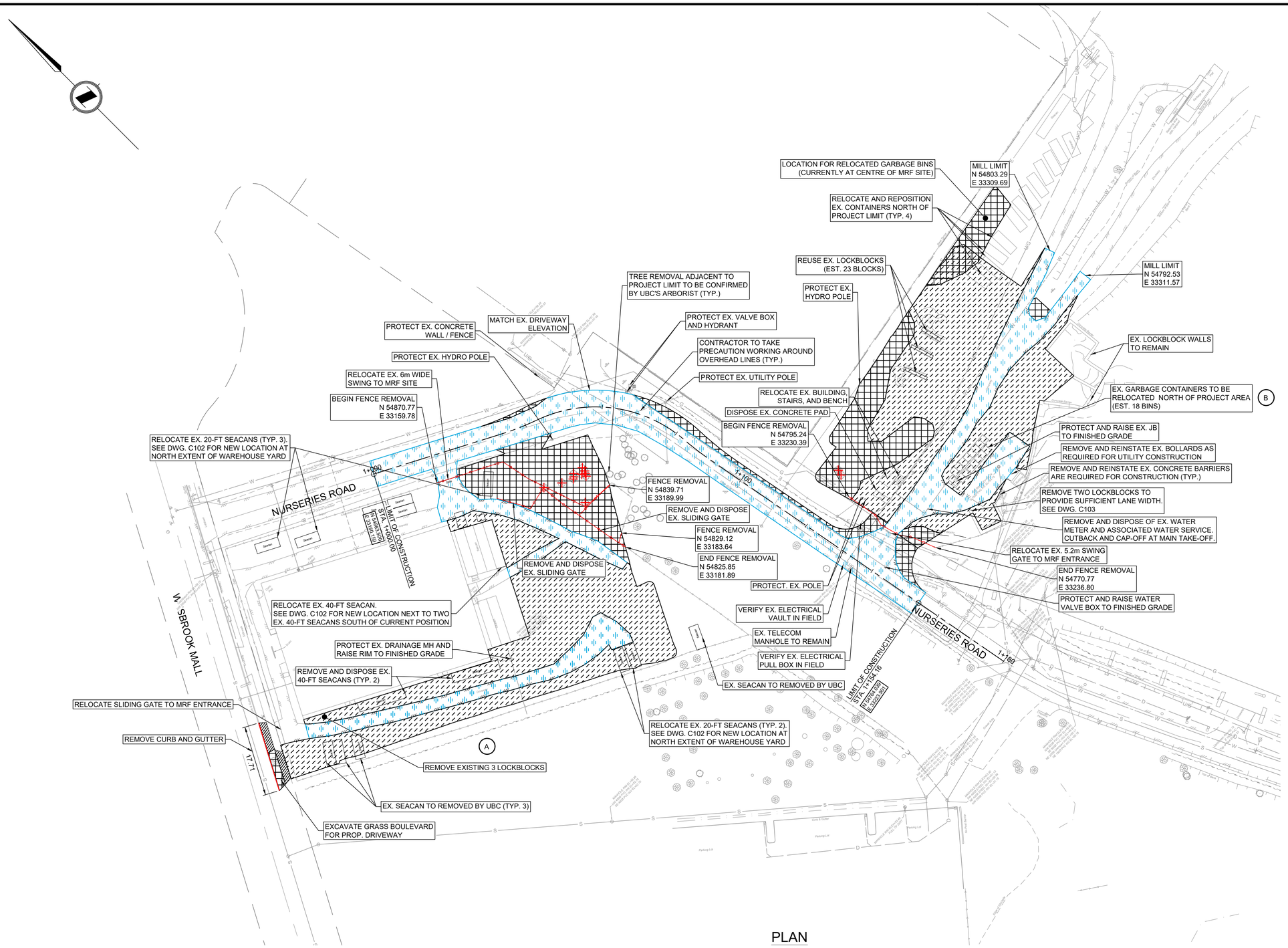

NOTES:

1. PRIOR TO THE START OF WORK, CONTRACTOR COORDINATE WITH UBC'S ABORIST, DIAMOND HEAD, TO CONFIRM TREE REMOVAL. DIAMOND HEAD SHALL BE PRESENT AND APPROVE TREE PROTECTION. TREE REMOVAL WORK IS TO BE COMPLETED BY A CERTIFIED ARBORIST.
2. REFER TO GEOWEST'S GEOTECHNICAL REPORTS DATED MARCH 1, 2024, FOR ON-SITE AND NURSERIES ROAD SITE PREPARATION DETAILS.
3. EXCAVATION SHALL INCLUDE REMOVAL OF ALL VEGETATION, FILL SOILS, ORGANIC SOILS, AND SOFT SOILS TO EXPOSE TILL-LIKE SOILS.
4. THE SUBGRADE MATERIAL SHALL BE APPROVED BY THE GEOTECHNICAL ENGINEER PRIOR TO ANY CONSTRUCTION.
5. EXCAVATED SUBGRADE SHALL BE COMPACTED AND PROOF ROLLED WITH A HEAVILY LOADED DUMP TRUCK AND HEAVY CONSTRUCTION EQUIPMENT. SURFACE DEFLECTION, DEFORMATIONS, RUTTING, OR CRACKING SHOULD BE EXCAVATED TO COMPETENT SUBGRADE AND REPLACED WITH ENGINEERED FILL.
6. REFER TO THE SITE LAYOUT PLANS DWG. C101 TO C103 AND GRADING AND DRAINAGE PLANS DWG. C201 TO C203 FOR LIMITS OF REMOVAL.
7. CONTRACTOR SHALL REMOVE AND DISPOSE MISCELLANEOUS ITEMS THAT ARE IN CONFLICT WITH NEW CONSTRUCTION.
8. PROTECT ALL EXISTING UTILITIES NOT DESIGNATED FOR RELOCATION OR REMOVAL WITHIN THE PROJECT AREA.
9. TEMPORARY CUT SLOPES SHALL BE COVERED WITH POLY SHEETING DURING THE ENTIRE WORK DURATION.

LEGEND

- TREE REMOVAL
- CURB REMOVAL
- CHAIN LINK FENCE REMOVAL
- EXCAVATE EXISTING SHRUB/VEGETATED AREA TO BOTTOM OF SUBBASE ELEVATION (DEPTH VARIES)
- EXCAVATE EXISTING GRAVEL SURFACE TO TOP OF DESIGN SUBBASE ELEVATION RESHAPE AND COMPACT
- REMOVE EX. ASPHALT AND REGRADE EXISTING BASE LAYER TO DESIGN BASE ELEVATION (ADD OR REMOVE MATERIAL AS REQUIRED)
- CONCRETE REMOVAL

PLAN
1:500

Rev	Date	Description	Drawn	Design	App'd
B	2025-06-13	ISSUED FOR DEVELOPMENT PERMIT	KY	KY	VT
A	2025-05-16	ISSUED FOR 100% DEVELOPMENT DESIGN	KY	KY	VT

THE UNIVERSITY OF BRITISH COLUMBIA

ORIGINAL DWG SIZE: ANSI D (22" x 34")

McElhanney
Suite 200
858 Beatty Street
Vancouver BC
Canada V6B 1C1
T 604 683 8521

0 1:500 25

PRELIMINARY NOT FOR CONSTRUCTION

THIS DRAWING HAS NOT BEEN APPROVED AND MAY CONTAIN ERRORS AND OMISSIONS.

THE UNIVERSITY OF BRITISH COLUMBIA
6200 UNIVERSITY BLVD, VANCOUVER, BC V6T 1Z4

UBC SOUTH CAMPUS WORKS YARD

REMOVALS PLAN

Drawing No. C002

Project Number 2121-01293-00

Rev. B

DESTROY ALL PRINTS BEARING PREVIOUS REVISION

PLAN
1:500

Rev	Date	Description	Drawn	Design	App'd
A	2025-06-13	ISSUED FOR DEVELOPMENT PERMIT	KY	KY	VT

THE UNIVERSITY OF BRITISH COLUMBIA

PRINTED HALF SIZE (11" x 17")
ORIGINAL DWG SIZE: ANSI D (22" x 34")

McElhanney
Suite 200
858 Beatty Street
Vancouver BC
Canada V6B 1C1
T 604 683 8521

0 1:500 25

PRELIMINARY
NOT FOR
CONSTRUCTION

THIS DRAWING HAS NOT BEEN APPROVED AND MAY CONTAIN ERRORS AND OMISSIONS.

THE UNIVERSITY OF BRITISH COLUMBIA
6200 UNIVERSITY BLVD, VANCOUVER, BC V6T 1Z4

UBC SOUTH CAMPUS WORKS YARD

CONTEXT PLAN

Drawing No.
C003

Project Number
2121-01293-00

Rev.
A

DESTROY ALL PRINTS BEARING PREVIOUS REVISION

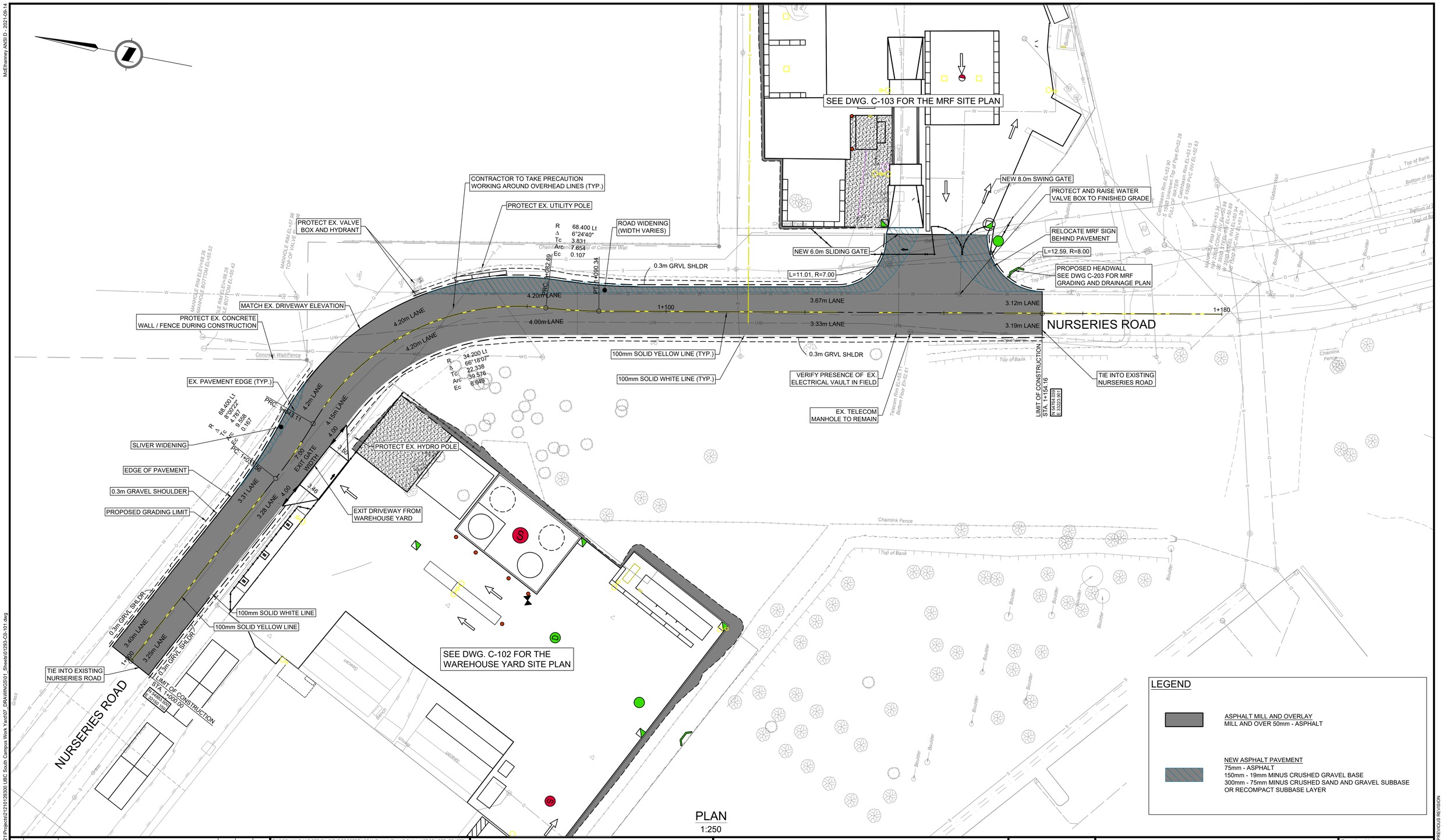

PLAN
1:250

Rev	Date	Description	Drawn	Design	App'd
B	2025-06-13	ISSUED FOR DEVELOPMENT PERMIT	KY	KY	VT
A	2025-05-16	ISSUED FOR 100% DEVELOPMENT DESIGN	KY	KY	VT

INFORMATION ON EXISTING UNDERGROUND FACILITIES MAY NOT BE COMPLETE OR ACCURATE. McELHANNEY, ITS EMPLOYEES AND DIRECTORS ARE NOT RESPONSIBLE NOR LIABLE FOR THE LOCATION OF ANY UNDERGROUND CONDUITS, PIPES, CABLES OR OTHER FACILITIES WHETHER SHOWN OR OMITTED FROM THIS PLAN. PRIOR TO CONSTRUCTION CONTRACTOR SHALL EXPOSE LOCATIONS OF ALL EXISTING FACILITIES BY HAND DIGGING OR HYDROVAC AND ADVISE THE ENGINEER OF POTENTIAL CONFLICTS.

THE UNIVERSITY OF BRITISH COLUMBIA

ORIGINAL DWG SIZE: ANSI D (22" x 34")

McElhanney
Suite 200
858 Beatty Street
Vancouver BC
Canada V6B 1C1
T 604 683 8521

0 1:250 10

PRELIMINARY NOT FOR CONSTRUCTION

THIS DRAWING HAS NOT BEEN APPROVED AND MAY CONTAIN ERRORS AND OMISSIONS

THE UNIVERSITY OF BRITISH COLUMBIA
6200 UNIVERSITY BLVD, VANCOUVER, BC V6T 1Z4

UBC SOUTH CAMPUS WORKS YARD

SITE LAYOUT PLAN
NURSERIES ROAD

Drawing No.
C101

Project Number: 2121-01293-00
Rev.: B

DESTROY ALL PRINTS BEARING PREVIOUS REVISION

DATE: 2025-06-13, 15:31 FILE: X:\2121\Projects\212101293\00 UBC South Campus Work Yard\07_DRAWINGS\01_Sheets\01293-C0-101.dwg

McElhanney ANSI D - 2021-09-14

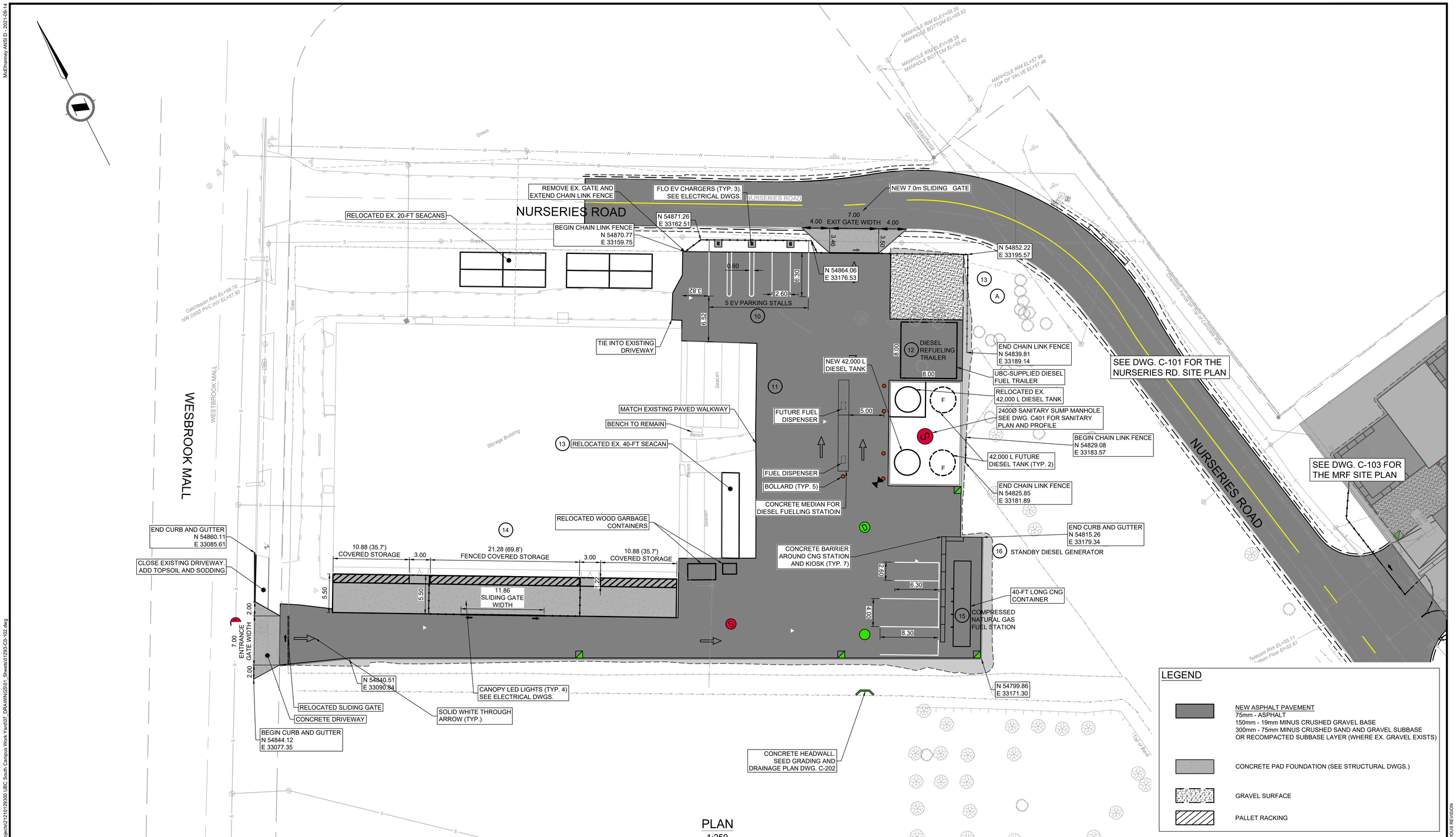

PLAN
1:250

Rev	Date	Description	Drawn	Design	App'd
B	2025-06-13	ISSUED FOR DEVELOPMENT PERMIT	KY	KY	VT
A	2025-05-16	ISSUED FOR 100% DEVELOPMENT DESIGN	KY	KY	VT

THE UNIVERSITY OF BRITISH COLUMBIA

ORIGINAL DWG SIZE: ANSI D (22" x 34")

McElhanney
Suite 200
858 Beatty Street
Vancouver BC
Canada V6B 1C1
T 604 683 8521

0 1:250 10

PRELIMINARY NOT FOR CONSTRUCTION

THIS DRAWING HAS NOT BEEN APPROVED AND MAY CONTAIN ERRORS AND OMISSIONS.

THE UNIVERSITY OF BRITISH COLUMBIA
6200 UNIVERSITY BLVD, VANCOUVER, BC V6T 1Z4

UBC SOUTH CAMPUS WORKS YARD

SITE LAYOUT PLAN
WAREHOUSE YARD

Drawing No.
C102

Project Number
2121-01293-00

Rev.
B

DESTROY ALL PRINTS BEARING PREVIOUS REVISION

DATE: 2025-06-13, 17:32 FILE: X:\2121\Projects\2121\01293\00 UBC South Campus Work Yard\07_DRAWINGS\01_Sheets\01293-C0-102.dwg

McElhanney ANSI D - 2021-09-14

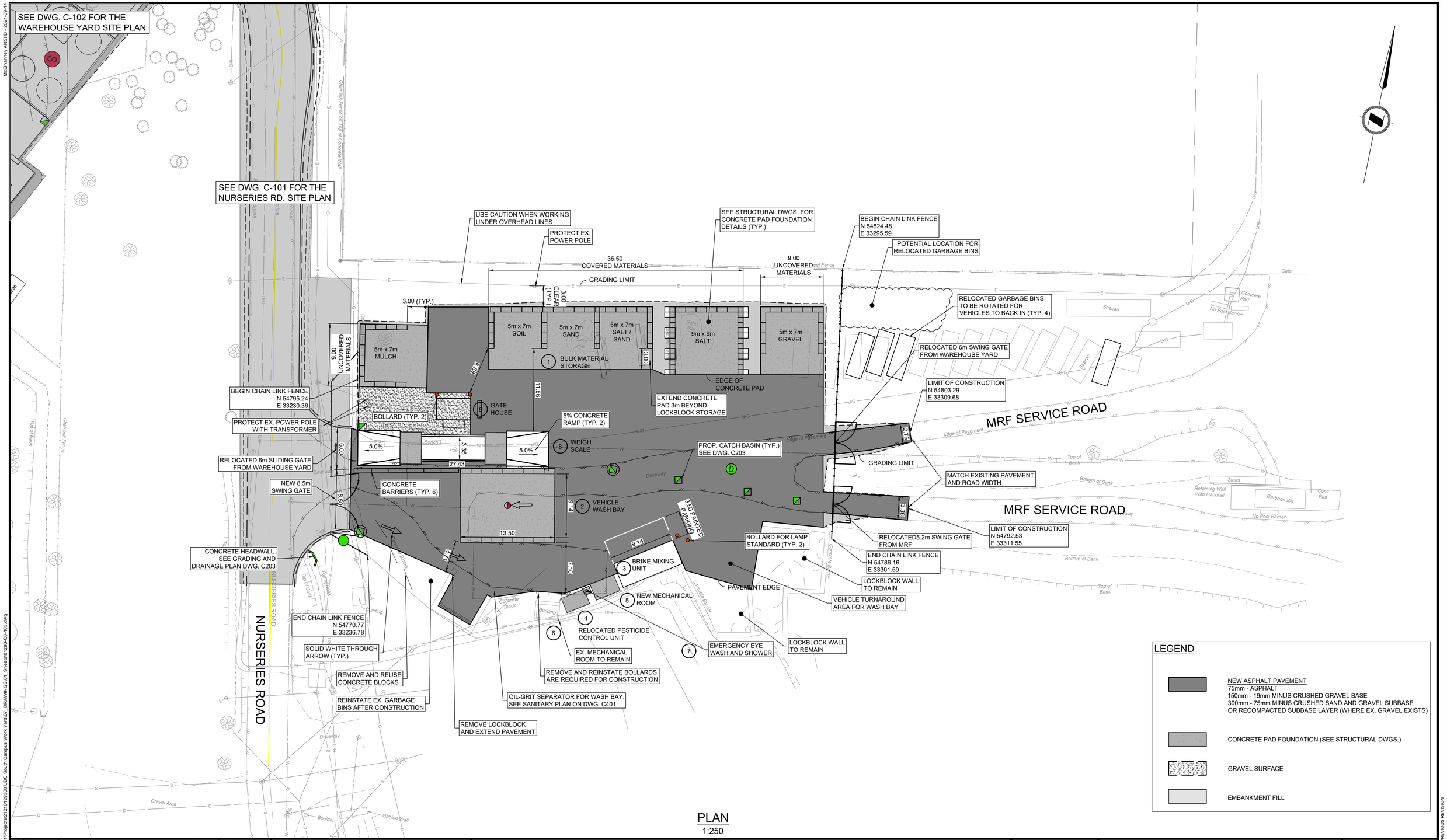

PLAN
1:250

Rev	Date	Description	Drawn	Design	App'd
B	2025-06-13	ISSUED FOR DEVELOPMENT PERMIT	KY	KY	VT
A	2025-05-16	ISSUED FOR 100% DEVELOPMENT DESIGN	KY	KY	VT

THE UNIVERSITY OF BRITISH COLUMBIA

ORIGINAL DWG SIZE: ANSI D (22" x 34")

McElhanney
Suite 200
858 Beatty Street
Vancouver BC
Canada V6B 1C1
T 604 683 8521

0 1:250 10

PRELIMINARY NOT FOR CONSTRUCTION

THIS DRAWING HAS NOT BEEN APPROVED AND MAY CONTAIN ERRORS AND OMISSIONS

THE UNIVERSITY OF BRITISH COLUMBIA
6200 UNIVERSITY BLVD, VANCOUVER, BC V6T 1Z4

UBC SOUTH CAMPUS WORKS YARD

SITE LAYOUT PLAN
MATERIAL RECOVERY FACILITY

Drawing No. C103

Project Number 2121-01293-00

Rev. B

DESTROY ALL PRINTS BEARING PREVIOUS REVISION

DATE: 2025-06-13, 15:48 FILE: X:\2121\Projects\2121\01293\00 UBC South Campus Work Yard\07_DRAWINGS\01_Sheets\01293-C0-103.dwg
McElhanney ANSI D - 2021-09-14

PLAN
1:500

Rev	Date	Description	Drawn	Design	App'd
B	2025-06-13	ISSUED FOR DEVELOPMENT PERMIT	KY	KY	VT
A	2025-05-16	ISSUED FOR 100% DEVELOPMENT DESIGN	KY	KY	VT

THE UNIVERSITY OF BRITISH COLUMBIA

ORIGINAL DWG SIZE: ANSI D (22" x 34")

McElhanney
Suite 200
858 Beatty Street
Vancouver BC
Canada V6B 1C1
T 604 683 8521

0 1:500 25

PRELIMINARY NOT FOR CONSTRUCTION

THIS DRAWING HAS NOT BEEN APPROVED AND MAY CONTAIN ERRORS AND OMISSIONS.

THE UNIVERSITY OF BRITISH COLUMBIA
6200 UNIVERSITY BLVD, VANCOUVER, BC V6T 1Z4

UBC SOUTH CAMPUS WORKS YARD

OVERALL UTILITY PLAN

Drawing No.
C200

Project Number 2121-01293-00
Rev. B

DESTROY ALL PRINTS BEARING PREVIOUS REVISION

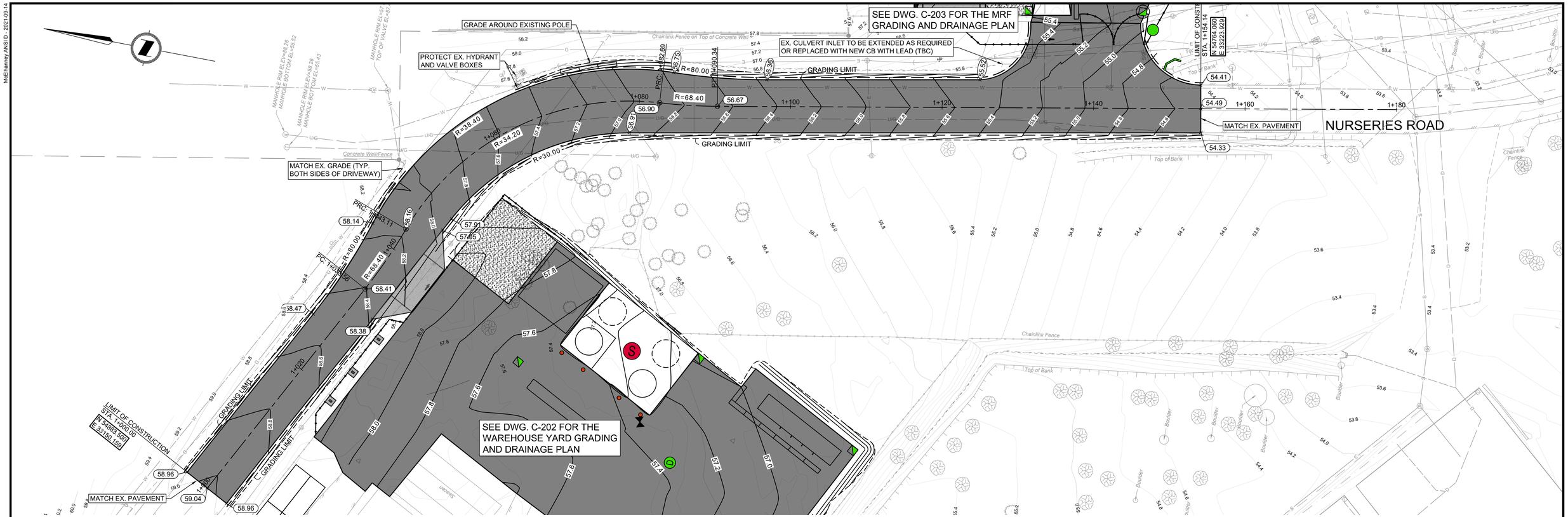

PLAN
1:250

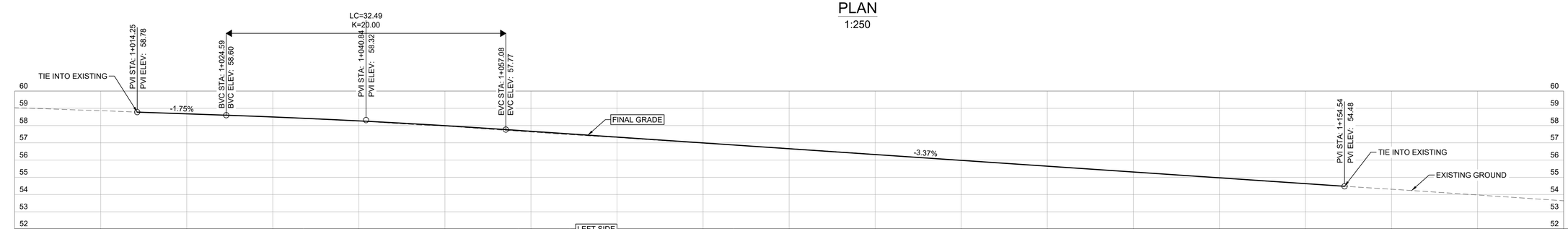

SUPERELEVATION		L 96.44		-2.5% -2.5%	L 25.00	0.0% -2.5%	L 25.00	-2.5% -2.5%	L 33.56			
PROPOSED ELEVATIONS @ CENTERLINE OF ROAD		54.971	55.646	56.321	56.995	57.670	58.272	58.682				
ORIGINAL GROUND ELEVATIONS @ CENTERLINE	53.64	54.31	54.96	55.66	56.34	56.98	57.62	58.25	58.67	59.04		
CHAINAGE	1+180	1+160	1+140	1+120	1+100	1+080	1+060	1+040	1+020	1+000		

LEFT SIDE
RIGHT SIDE

PROFILE
1:250 H
1:125 V

Rev	Date	Description	Drawn	Design	App'd
B	2025-06-13	ISSUED FOR DEVELOPMENT PERMIT	KY	KY	VT
A	2025-05-16	ISSUED FOR 100% DEVELOPMENT DESIGN	KY	KY	VT

THE UNIVERSITY OF BRITISH COLUMBIA

ORIGINAL DWG SIZE: ANSI D (22" x 34")

McElhanney
Suite 200
858 Beatty Street
Vancouver BC
Canada V6B 1C1
T 604 683 8521

0 H1:250 10
0 V1:125 5

PRELIMINARY NOT FOR CONSTRUCTION

THIS DRAWING HAS NOT BEEN APPROVED AND MAY CONTAIN ERRORS AND OMISSIONS.

THE UNIVERSITY OF BRITISH COLUMBIA
6200 UNIVERSITY BLVD, VANCOUVER, BC V6T 1Z4

UBC SOUTH CAMPUS WORKS YARD

GRADING AND DRAINAGE PLAN/PROFILE
NURSERIES ROAD

Drawing No. C201

Project Number 2121-01293-00

Rev. B

DATE: 2025-06-13, 15:34 FILE: X:\2121\Projects\2121012930\0 UBC South Campus Work Yard\07_DRAWINGS\01_Sheets\01293-C0-201.dwg

McElhanney ANSI D - 2021-09-14

DESTROY ALL PRINTS BEARING PREVIOUS REVISION

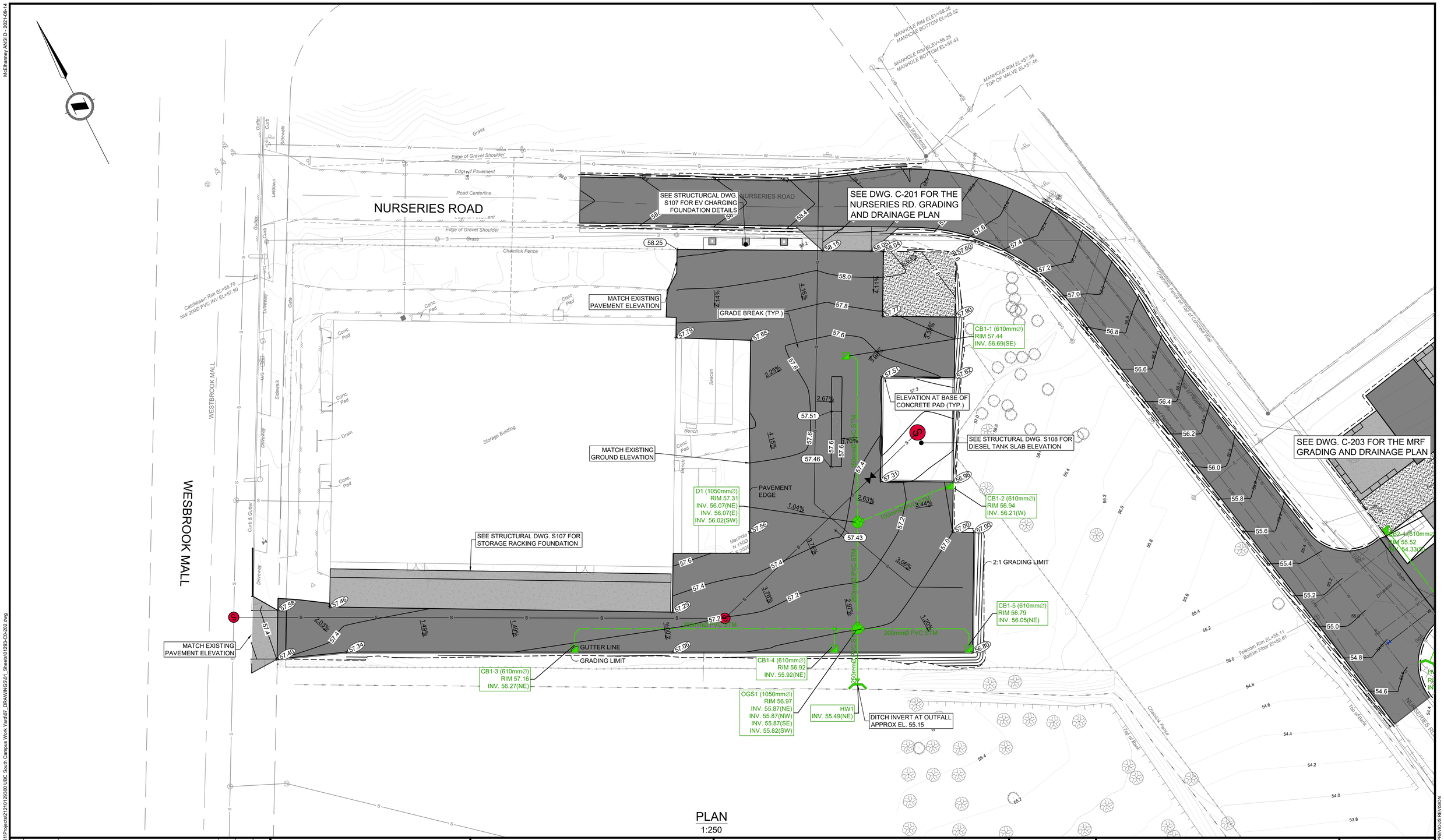

PLAN
1:250

Rev	Date	Description	Drawn	Design	App'd
B	2025-06-13	ISSUED FOR DEVELOPMENT PERMIT	KY	KY	VT
A	2025-05-16	ISSUED FOR 100% DEVELOPMENT DESIGN	KY	KY	VT

THE UNIVERSITY OF BRITISH COLUMBIA

ORIGINAL DWG SIZE: ANSI D (22" x 34")

McElhanney
Suite 200
858 Beatty Street
Vancouver BC
Canada V6B 1C1
T 604 683 8521

0 1:250 10

PRELIMINARY NOT FOR CONSTRUCTION

THIS DRAWING HAS NOT BEEN APPROVED AND MAY CONTAIN ERRORS AND OMISSIONS.

THE UNIVERSITY OF BRITISH COLUMBIA
6200 UNIVERSITY BLVD, VANCOUVER, BC V6T 1Z4

UBC SOUTH CAMPUS WORKS YARD

GRADING AND DRAINAGE PLAN
WAREHOUSE YARD

Drawing No.
C202

Project Number
2121-01293-00

Rev.
B

DESTROY ALL PRINTS BEARING PREVIOUS REVISION

DATE: 2025-06-13, 15:34 FILE: X:\2121\Projects\2121\01293\00_UBC South Campus Work Yard\07_DRAWINGS\01_Sheets\01293-C0-202.dwg

McElhanney ANSI D - 2021-09-14

PLAN
1:250

Rev	Date	Description	Drawn	Design	App'd
B	2025-06-13	ISSUED FOR DEVELOPMENT PERMIT	KY	KY	VT
A	2025-05-16	ISSUED FOR 100% DESIGN DEVELOPMENT	KY	KY	VT

THE UNIVERSITY OF BRITISH COLUMBIA

ORIGINAL DWG SIZE: ANSI D (22" x 34")

McElhanney
Suite 200
858 Beatty Street
Vancouver BC
Canada V6B 1C1
T 604 683 8521

0 1:250 10

PRELIMINARY NOT FOR CONSTRUCTION

THIS DRAWING HAS NOT BEEN APPROVED AND MAY CONTAIN ERRORS AND OMISSIONS.

THE UNIVERSITY OF BRITISH COLUMBIA
6200 UNIVERSITY BLVD, VANCOUVER, BC V6T 1Z4

UBC SOUTH CAMPUS WORKS YARD

GRADING AND DRAINAGE PLAN
MATERIAL RECOVERY FACILITY

Drawing No.
C203

Project Number
2121-01293-00

Rev.
B

DESTROY ALL PRINTS BEARING PREVIOUS REVISION

DATE: 2025-06-13, 15:35 FILE: X:\2121\Projects\2121\01293\00 UBC South Campus Work Yard\07_DRAWINGS\01_Sheets\01293-C0-203.dwg
McElhanney ANSI D - 2021-09-14

MMCD STANDARD DETAIL DRAWINGS

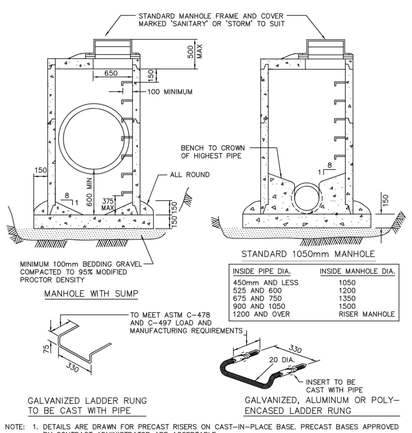

INSIDE PIPE DIA.	INSIDE MANHOLE DIA.
450mm AND LESS	1050
525 AND 600	1200
675 AND 750	1350
900 AND 1050	1500
1200 AND OVER	RISER MANHOLE

NOTE:
1. DETAILS ARE DRAWN FOR PRECAST RISERS ON CAST-IN-PLACE BASE. PRECAST BASES APPROVED BY CONTRACT ADMINISTRATOR ARE ACCEPTABLE.
2. MAXIMUM DEPTH TO FIRST RUNG IS 500mm. WHEN HANDHOLD IS INSTALLED BETWEEN TOP AND FIRST RUNG, MAXIMUM DEPTH MAY BE INCREASED TO 660mm
3. FOR MANHOLES OVER 1200mm DIA. BASE THICKNESS TO BE 200mm.
4. REFER TO DRAWING S2 FOR CONNECTION DETAILS.
5. REFER TO CONTRACT DRAWINGS, SECTION 33 44 01 FOR DETAILED SPECIFICATIONS.
6. ALL DIMENSIONS IN MILLIMETERS UNLESS OTHERWISE NOTED.

NOT TO SCALE

2019 STANDARD AND SUMP MANHOLES — DRAWING NUMBER: **S1**

MMCD STANDARD DETAIL DRAWINGS

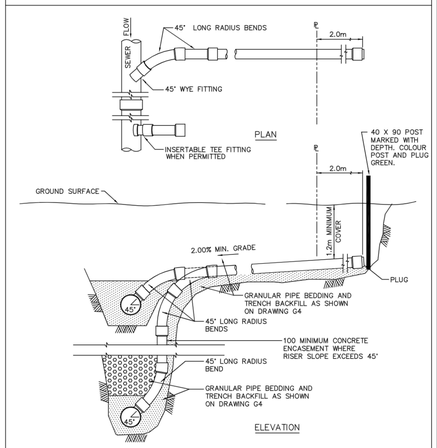

NOTE:
1. CONCRETE STORM SEWER PIPES TO BE PROVIDED WITH SUPPLIER INSTALLED PVC STUB.
2. CONNECTIONS TO BE 100 MINIMUM OR LARGER AS SPECIFIED ON CONTRACT DRAWINGS.
3. RISER TYPE SERVICE TO BE USED ONLY WHEN SERVICE IS MORE THAT 2.4m ABOVE WYE INVERT OR AS DIRECTED BY CONTRACT ADMINISTRATOR.
4. LOCATION OF SERVICE AND MARKER AS SHOWN ON CONTRACT DRAWINGS.
5. ALL DIMENSIONS IN MILLIMETRES UNLESS OTHERWISE NOTED.

NOT TO SCALE

2019 STORM SEWER SERVICE CONNECTION — DRAWING NUMBER: **S8**

MMCD STANDARD DETAIL DRAWINGS

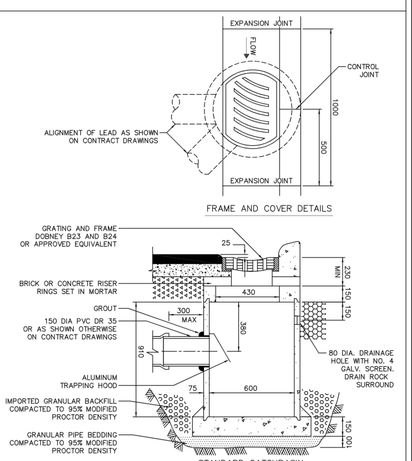

NOTE:
1. PRECAST UNITS c/w BASE, APPROVED BY CONTRACT ADMINISTRATOR, ARE ACCEPTABLE.
2. REFER TO CONTRACT DRAWINGS, SECTION 33 44 01 FOR DETAILED SPECIFICATIONS.
3. ALL DIMENSIONS IN MILLIMETRES UNLESS OTHERWISE NOTED.

NOT TO SCALE

2019 TOP INLET CATCHBASIN — DRAWING NUMBER: **S11**

MMCD STANDARD DETAIL DRAWINGS

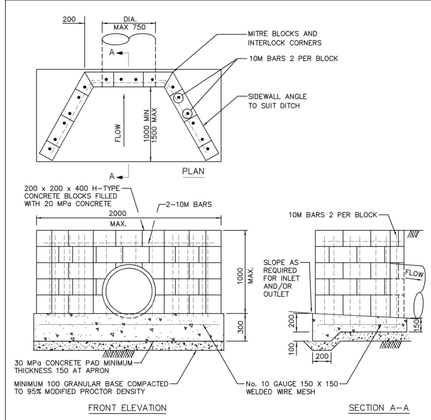

NOTE:
1. PRECAST UNIT MAY BE PROVIDED AS ALTERNATIVE WITH CONTRACT ADMINISTRATOR'S PRIOR APPROVAL.
2. INSTALL SAFETY HANDRAIL AND / OR SAFETY GRILLAGE IF SPECIFIED ON CONTRACT DRAWINGS.
3. DETAIL MAY BE MODIFIED FOR USE AS OUTLET STRUCTURE.
4. WHEN SAFETY GRILLAGE IS SPECIFIED INSTALL SIMILAR TO DRAWING S13.
5. REFER TO CONTRACT DRAWINGS FOR LOCATIONS AND SITE SPECIFIC DIMENSIONS. REFER TO SECTIONS 03 20 01 AND 03 30 53 FOR DETAILED SPECIFICATIONS.
6. ALL DIMENSIONS IN MILLIMETRES UNLESS OTHERWISE NOTED.

NOT TO SCALE

2019 CONCRETE BLOCK ENDWALL — DRAWING NUMBER: **S14**

DETAILS

Rev	Date	Description	Drawn	Design	App'd
B	2025-06-13	ISSUED FOR DEVELOPMENT PERMIT	KY	KY	VT
A	2025-04-25	ISSUED FOR 100% DEVELOPMENT DESIGN	KY	KY	VT

THE UNIVERSITY OF BRITISH COLUMBIA

ORIGINAL DWG SIZE: ANSI D (22" x 34")

McElhanney
Suite 200
858 Beatty Street
Vancouver BC
Canada V6B 1C1
T 604 683 8521

PRELIMINARY NOT FOR CONSTRUCTION

THIS DRAWING HAS NOT BEEN APPROVED AND MAY CONTAIN ERRORS AND OMISSIONS

THE UNIVERSITY OF BRITISH COLUMBIA
6200 UNIVERSITY BLVD, VANCOUVER, BC V6T 1Z4

UBC SOUTH CAMPUS WORKS YARD

DRAINAGE DETAILS

Drawing No. C204

Project Number 2121-01293-00 — Rev. B

DATE: 2025-06-13, 15:35 FILE: X:\2121\Projects\2121012930\0 UBC South Campus Work Yard\07_DRAWINGS\01_Sheets\01283-CD-204.dwg

DESTROY ALL PRINTS BEARING PREVIOUS REVISION

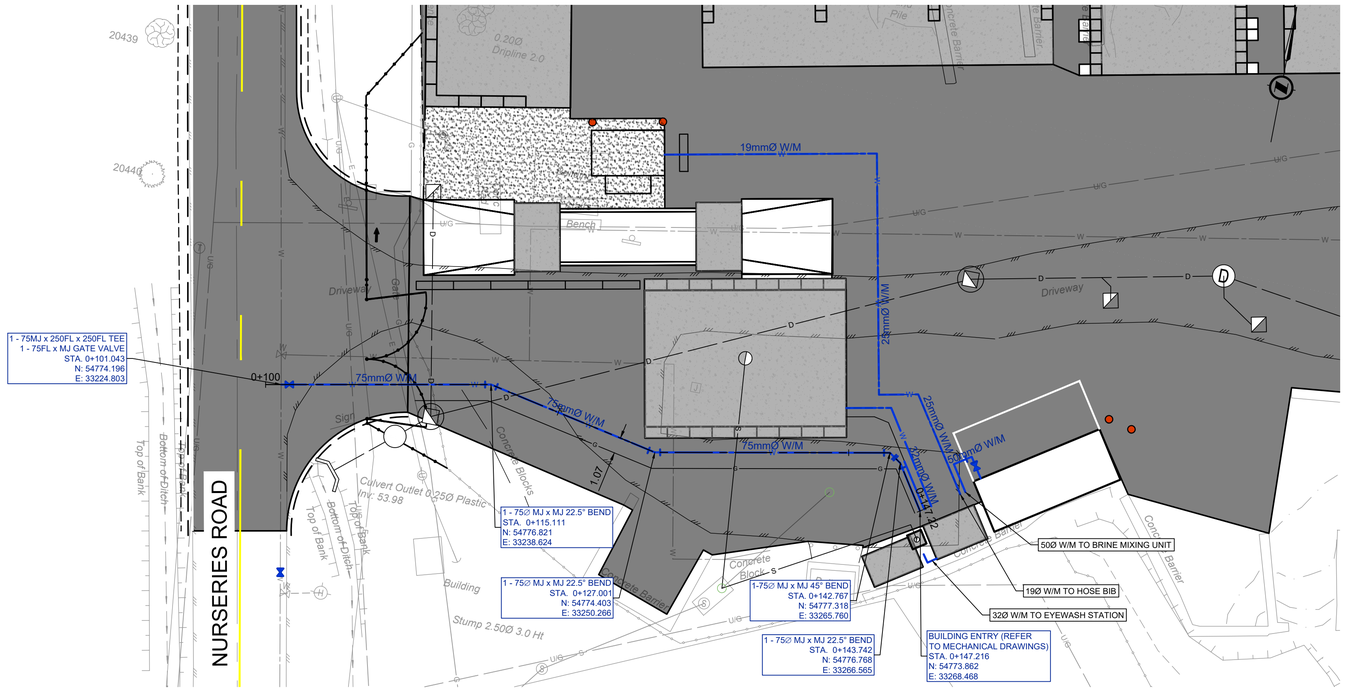

L10 WATERMAIN - PLAN

1:200

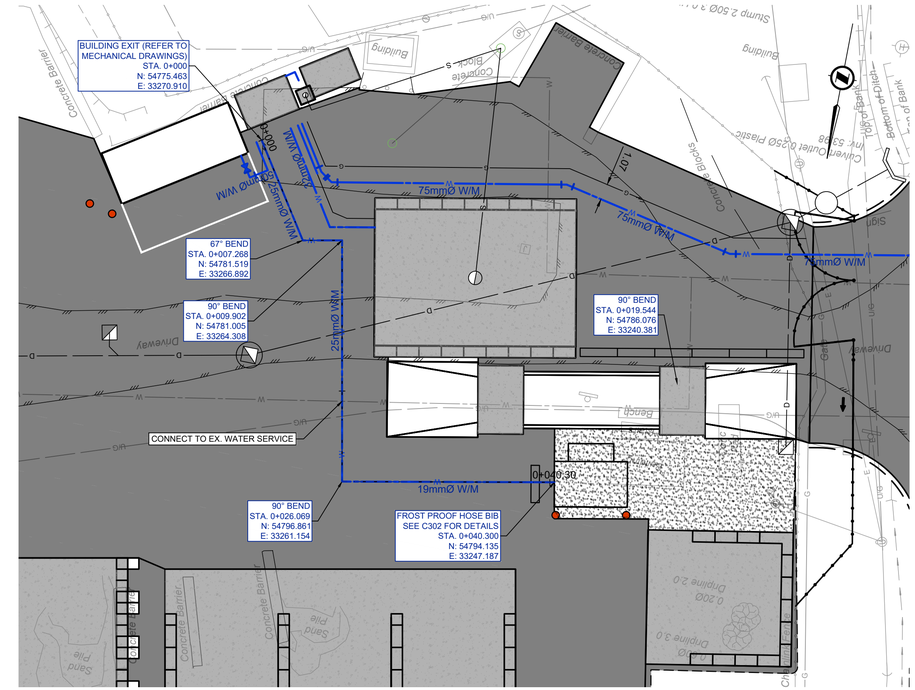

L15 WATERMAIN - PLAN

1:200

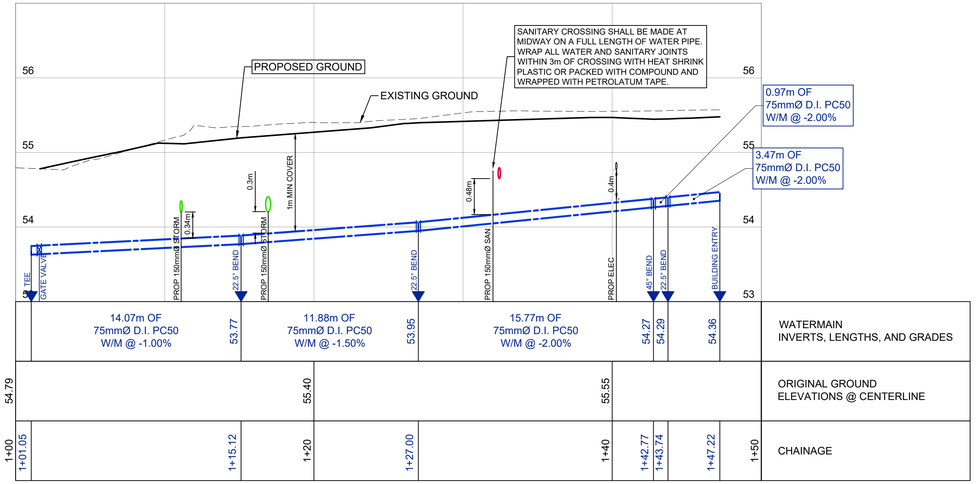

L10 WATERMAIN - PROFILE

H 1:200 V 1:40

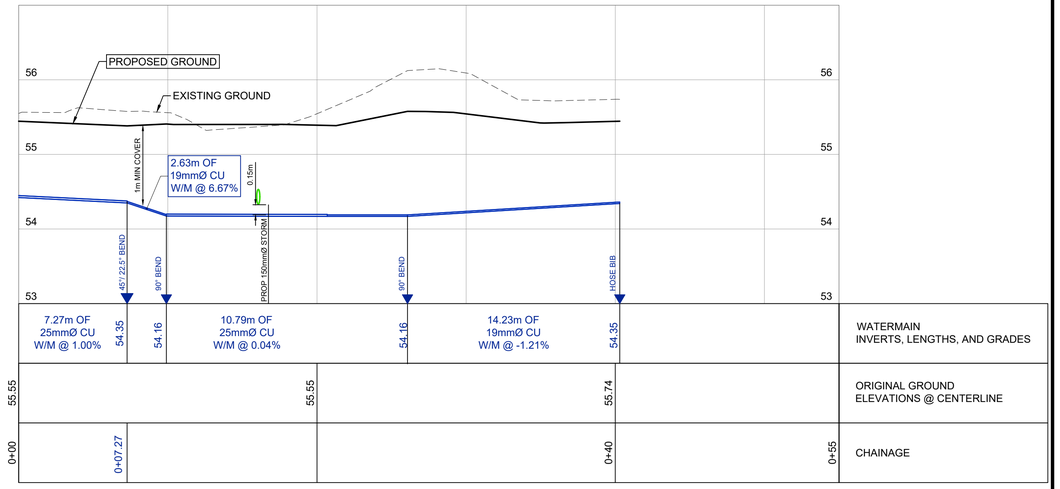

L15 WATERMAIN - PROFILE

H 1:200 V 1:40

Rev	Date	Description	Drawn	Design	App'd
B	2025-06-13	ISSUED FOR DEVELOPMENT PERMIT	TP	KY	VT
A	2025-05-16	ISSUED FOR 100% DEVELOPMENT DESIGN	TP	KY	VT

THE UNIVERSITY OF BRITISH COLUMBIA

ORIGINAL DWG SIZE: ANSI D (22" x 34")

McElhanney
Suite 200
858 Beatty Street
Vancouver BC
Canada V6B 1C1
T 604 683 8521

0 H1:200 10
0 V1:40 2

PRELIMINARY NOT FOR CONSTRUCTION

THIS DRAWING HAS NOT BEEN APPROVED AND MAY CONTAIN ERRORS AND OMISSIONS

THE UNIVERSITY OF BRITISH COLUMBIA
6200 UNIVERSITY BLVD, VANCOUVER, BC V6T 1Z4

UBC SOUTH CAMPUS WORKS YARD

WATER SERVICING PLAN AND PROFILE

Drawing No. C301

Project Number 2121-01293-00

Rev. B

DESTROY ALL PRINTS BEARING PREVIOUS REVISION

DATE: 2025-06-13, 18:01 FILE: X:\2121\Projects\2121\01293\00 UBC South Campus Work Yard\07_DRAWINGS\01_Sheets\01293-C0-301.dwg
McElhanney ANSI D - 2021-09-14

MMCD STANDARD DETAIL DRAWINGS

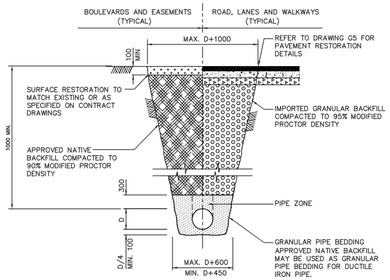

NOTE: 1. TRENCHING TO COMPLY WITH ALL REQUIREMENTS OF WORKSAFE BC.
2. REFER TO CONTRACT DRAWINGS, SECTION 31 23 01 FOR DETAILED SPECIFICATIONS.
3. ALL DIMENSIONS IN MILLIMETERS UNLESS OTHERWISE NOTED.

NOT TO SCALE

2019

UTILITY TRENCH — DRAWING NUMBER: **G4**

MMCD STANDARD DETAIL DRAWINGS

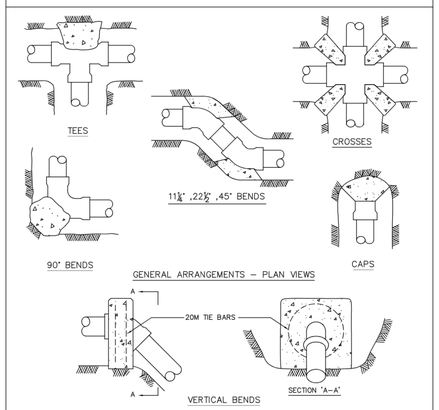

NOTE: 1. REFER TO CONTRACT DRAWINGS FOR SPECIFIED BEARING AREAS OF THRUST BLOCKS AND/OR SPECIFIC REQUIREMENTS NOT SHOWN ON THIS DRAWING.
2. PLACE 6 mil POLYETHYLENE ON INTERFACE BETWEEN CONCRETE AND FITTING.
3. PLACE 20 MPa CONCRETE AGAINST UNDISTURBED GROUND; KEEP CONCRETE CLEAR OF FITTING JOINTS.
4. REFER TO CONTRACT DRAWINGS, SECTIONS. 33 11 01 AND 03 30 53 FOR DETAILED SPECIFICATIONS.
5. REFER TO CONTRACT DRAWINGS, SECTIONS. 33 11 01 AND 03 30 53 FOR DETAILED SPECIFICATIONS.
6. ALL DIMENSIONS IN MILLIMETRES UNLESS OTHERWISE NOTED.

NOT TO SCALE

2019

TYPICAL THRUST BLOCK ARRANGEMENTS — DRAWING NUMBER: **W1**

MMCD STANDARD DETAIL DRAWINGS

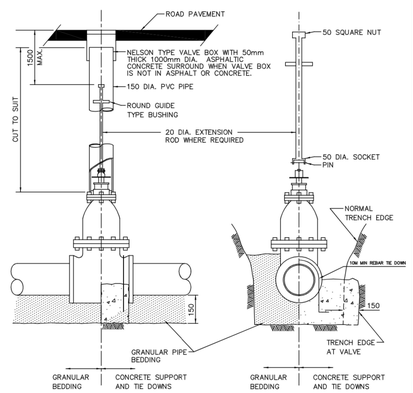

NOTE: 1. REFER TO CONTRACT DRAWINGS FOR VALVE INSTALLATION DETAILS IN AREAS OF UNSTABLE GROUND (WHERE APPLICABLE).
2. REFER TO CONTRACT DRAWINGS, SECTION 33 11 01 FOR DETAILED SPECIFICATIONS.
3. ALL DIMENSIONS IN MILLIMETRES UNLESS OTHERWISE NOTED.

NOT TO SCALE

2019

GATE VALVE INSTALLATION — DRAWING NUMBER: **W3**

MFG: CAMPBELL

TYPE: FROST PROOF, LEAD FREE YARD HYDRANT:
2 FT BURY DP, 57 IN L, ¾ IN FNPT INLET SIZE

HT: 57 INCH (1447mm).

OR APPROVED EQUIVALENT.

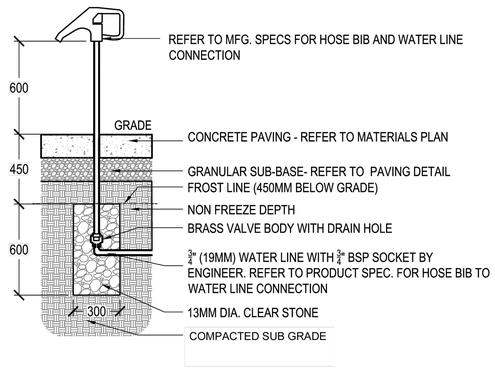

FROST PROOF YARD HYDRANT
SCALE NTS

Rev	Date	Description	Drawn	Design	App'd
B	2025-06-13	ISSUED FOR DEVELOPMENT PERMIT	KY	KY	VT
A	2025-05-16	ISSUED FOR 100% DEVELOPMENT DESIGN	KY	KY	VT

THE UNIVERSITY OF BRITISH COLUMBIA

ORIGINAL DWG SIZE: ANSI D (22" x 34")

McElhanney

Suite 200
858 Beatty Street
Vancouver BC
Canada V6B 1C1
T 604 683 8521

PRELIMINARY NOT FOR CONSTRUCTION

THIS DRAWING HAS NOT BEEN APPROVED AND MAY CONTAIN ERRORS AND OMISSIONS

THE UNIVERSITY OF BRITISH COLUMBIA
6200 UNIVERSITY BLVD, VANCOUVER, BC V6T 1Z4

UBC SOUTH CAMPUS WORKS YARD

WATER SERVICING DETAILS

Drawing No. C302

Project Number 2121-01293-00

Rev. B

DATE: 2025-06-13, 15:37 FILE: X:\2121\Projects\2121012930\0 UBC South Campus Work Yard\07_DRAWINGS\01_Sheets\01293-C0-302.dwg

DESTROY ALL PRINTS BEARING PREVIOUS REVISION

SANITARY SEWER STRUCTURES				
No.	RIM ELEV.	INV. ELEV.	COORDINATES	DESCRIPTION
S1	57.19	55.44 E 55.44 NW	N 54820.442 E 33141.658	1,500 mm° CONC. OIL WATER SEPARATOR
S2	57.57	55.63 W	N 54831.824 E 33178.442	2,400 mm° CONC. MH
S4	55.29	54.67 S	N 54781.732 E 33255.056	610 mm CONC. CB
S5	55.51	54.76 NW	N 54771.938 E 33268.613	610 mm CONC. CB
S6	57.21	55.09 SE	N 54852.439 E 33078.679	1,050 mm° CONC. MH

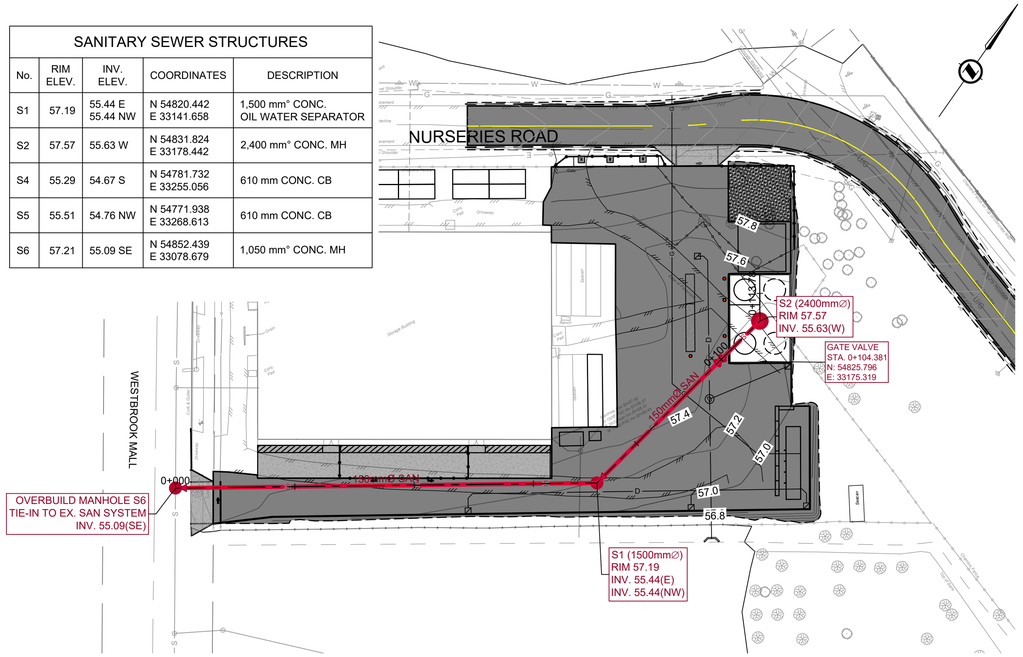

L20 SANITARY - PLAN AT DIESEL TANK

1:500

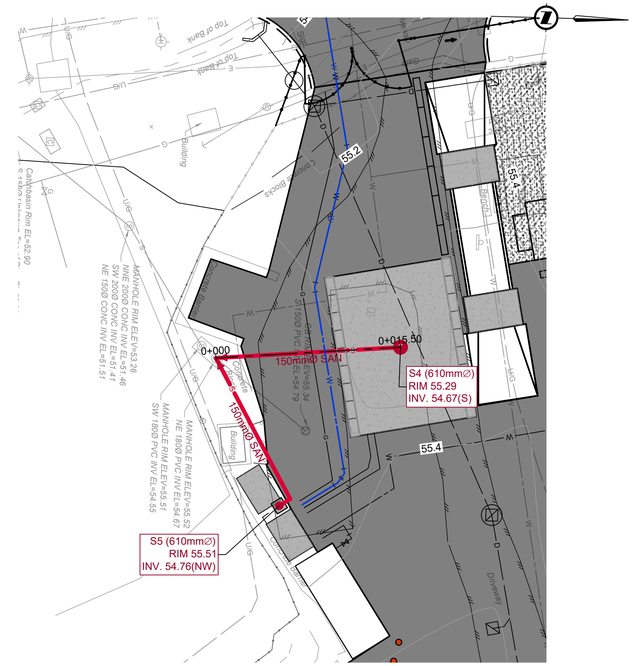

L50 SANITARY - PLAN AT VEHICLE WASH BAY

1:250

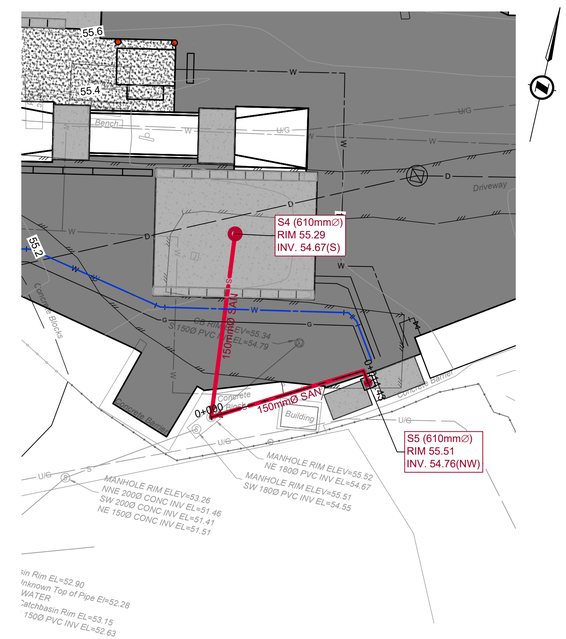

L60 SANITARY - PLAN AT EMERGENCY EYEWASH AND SHOWER STATION

1:250

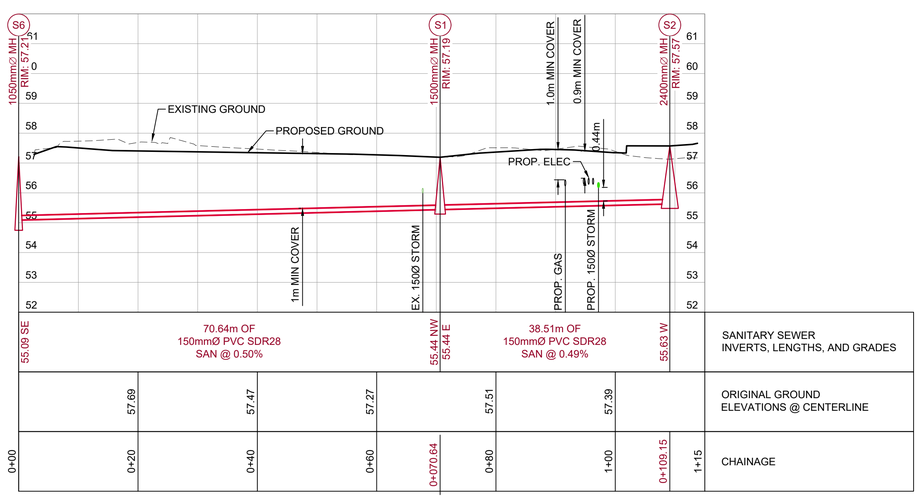

L20 SANITARY - PROFILE

H 1:500 V 1:100

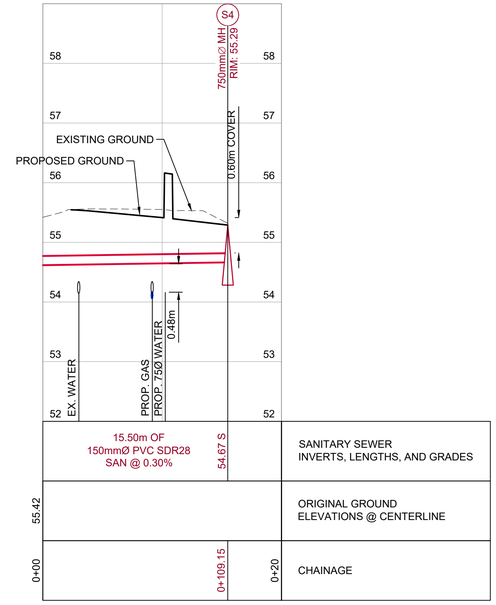

L50 SANITARY - PROFILE

H 1:250 V 1:50

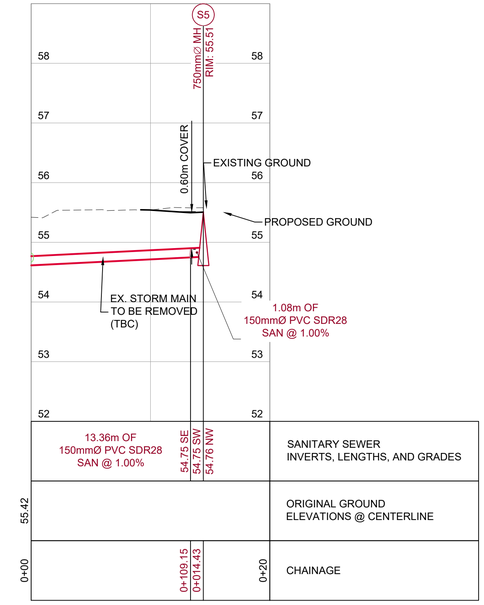

L60 SANITARY - PROFILE

H 1:250 V 1:50

Rev	Date	Description	Drawn	Design	App'd
B	2025-06-13	ISSUED FOR DEVELOPMENT PERMIT	TP	KY	VT
A	2025-05-16	ISSUED FOR 100% DEVELOPMENT DESIGN	TP	KY	VT

THE UNIVERSITY OF BRITISH COLUMBIA

ORIGINAL DWG SIZE: ANSI D (22" x 34")

McElhanney
Suite 200
858 Beatty Street
Vancouver BC
Canada V6B 1C1
T 604 683 8521

0 H1:250 10
0 V1:50 2

PRELIMINARY
NOT FOR
CONSTRUCTION

THIS DRAWING HAS NOT BEEN APPROVED AND MAY CONTAIN ERRORS AND OMISSIONS.

THE UNIVERSITY OF BRITISH COLUMBIA
6200 UNIVERSITY BLVD, VANCOUVER, BC V6T 1Z4

UBC SOUTH CAMPUS WORKS YARD

SANITARY SERVICE PLAN AND PROFILE

Drawing No.
C401

Project Number
2121-01293-00

Rev.
B

DESTROY ALL PRINTS BEARING PREVIOUS REVISION

DATE: 2025-06-13, 17:04 FILE: X:\2121\Projects\2121\01293\00 UBC South Campus Work Yard\07_DRAWINGS\01_Sheets\01293-C0-401.dwg
McElhanney ANSI D - 2021-09-14

MMCD STANDARD DETAIL DRAWINGS

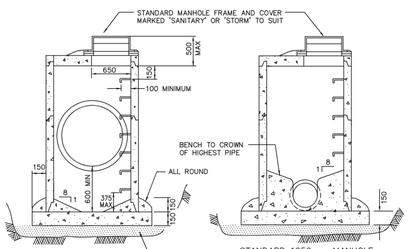

MANHOLE WITH SUMP

STANDARD 1050mm MANHOLE

INSIDE PIPE DIA.	INSIDE MANHOLE DIA.
450mm AND LESS	1050
525 AND 600	1200
675 AND 750	1350
900 AND 1050	1500
1200 AND OVER	RISER MANHOLE

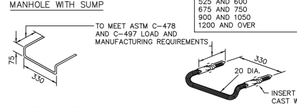

GALVANIZED LADDER RUNG TO BE CAST WITH PIPE

GALVANIZED, ALUMINUM OR POLY-ENCASED LADDER RUNG

NOTE:
1. DETAILS ARE DRAWN FOR PRECAST RISERS ON CAST-IN-PLACE BASE. PRECAST BASES APPROVED BY CONTRACT ADMINISTRATOR ARE ACCEPTABLE.
2. MAXIMUM DEPTH TO FIRST RUNG IS 500mm. WHEN HANDHOLD IS INSTALLED BETWEEN TOP AND FIRST RUNG, MAXIMUM DEPTH MAY BE INCREASED TO 660mm
3. FOR MANHOLES OVER 1200mm DIA. BASE THICKNESS TO BE 200mm.
4. REFER TO DRAWING S2 FOR CONNECTION DETAILS.
5. REFER TO CONTRACT DRAWINGS, SECTION 33 44 01 FOR DETAILED SPECIFICATIONS.
6. ALL DIMENSIONS IN MILLIMETERS UNLESS OTHERWISE NOTED.

NOT TO SCALE

2019

STANDARD AND SUMP MANHOLES

DRAWING NUMBER: **S1**

MMCD STANDARD DETAIL DRAWINGS

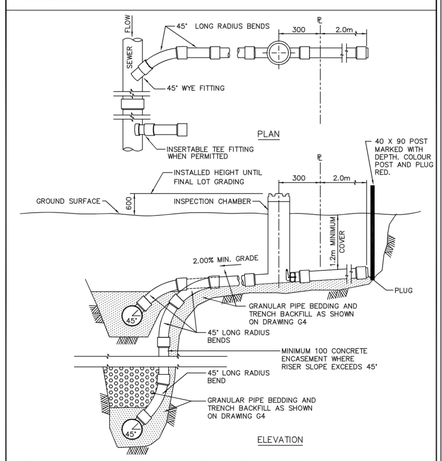

NOTE:
1. CONNECTIONS TO BE 100 OR AS SPECIFIED ON CONTRACT DRAWINGS.
2. RISER TYPE SERVICE TO BE USED ONLY WHEN SERVICE IS MORE THAN 2.4m ABOVE WYE INVERT OR AS DIRECTED BY CONTRACT ADMINISTRATOR.
3. LOCATION OF SERVICE AND MARKER AS SHOWN ON CONTRACT DRAWINGS.
4. SEE DRAWING S9 FOR DETAILS OF INSPECTION CHAMBER AND INSTALLATION REQUIREMENTS.
5. ALL DIMENSIONS IN MILLIMETERS UNLESS OTHERWISE NOTED.

NOT TO SCALE

2019

SANITARY SEWER SERVICE CONNECTION

DRAWING NUMBER: **S7**

DETAILS

Rev	Date	Description	Drawn	Design	App'd
B	2025-06-13	ISSUED FOR DEVELOPMENT PERMIT	KY	KY	VT
A	2025-04-25	ISSUED FOR 100% DEVELOPMENT DESIGN	KY	KY	VT

THE UNIVERSITY OF BRITISH COLUMBIA

ORIGINAL DWG SIZE: ANSI D (22" x 34")

McElhanney
Suite 200
858 Beatty Street
Vancouver BC
Canada V6B 1C1
T 604 683 8521

PRELIMINARY NOT FOR CONSTRUCTION

THIS DRAWING HAS NOT BEEN APPROVED AND MAY CONTAIN ERRORS AND OMISSIONS

THE UNIVERSITY OF BRITISH COLUMBIA
6200 UNIVERSITY BLVD, VANCOUVER, BC V6T 1Z4

UBC SOUTH CAMPUS WORKS YARD

SANITARY SERVICE DETAILS

Drawing No. C402

Project Number 2121-01293-00

Rev. B

DATE: 2025-06-13, 15:37 FILE: X:\2121\Projects\2121\01293\00 UBC South Campus Work Yard\07_DRAWINGS\01 Sheets\01293-C0-402.dwg

DESTROY ALL PRINTS BEARING PREVIOUS REVISION

LOCATION	NUMBER	ELEMENT	INFORMATION	CIVIL CONSIDERATIONS	MECHANICAL CONSIDERATIONS	ELECTRICAL CONSIDERATIONS	STRUCTURAL CONSIDERATIONS	SUPPLIER INFORMATION
MATERIAL RECOVERY FACILITY	1	BULK MATERIAL STORAGE	- COVERED SALT: 9m x 9m - COVERED SAND: 5m x 7m - COVERED SAND/SALT: 5m x 7m - COVERED SOIl: 5m x 7m - UNCOVERED MULCH: 5m x 6m - UNCOVERED GRAVEL: 5m x 7m	- LOCK BLOCKS - FENCING AND GATE TO ENCLOSE THE BULK MATERIAL STORAGE AREA - BULK MATERIAL STORAGE TO BE 3m FROM OVERHEAD BCH LINES	N/A	- LIGHTING TO BE MOUNTED ONTO COVERED STRUCTURE: LED LIGHT MODEL no. SCAN-SPS-SW-8 (TBD) SELECTABLE CANOPY LIGHT	- CONCRETE SLAB FOUNDATION FOR ALL MATERIAL STORAGE BINS - COVERED CANOPIES FOR SALT, SAND, SAND/SALT, AND SOIL, ASSUMING TWO BLOCK HIGH BINS BY SUPPLIER LINDOME STRUCTURES."	- CANOPY: HTTPS://LINDOMESTRUCTURES.COM/ - LOCK BLOCK: HTTPS://LOCKBLOCK.COM/ - FENCING AND GATE: - HTTPS://WWW.BLUEPINEENTERPRISES.COM/ - LIGHTING: ABOVEALL LIGHTING (TBD)"
	2	VEHICLE WASHBAY	- CLEAR AREA AT WASHBAY FOR VEHICLE WASHING 30' X 40' (9.1m x 12.2m), PARTIALLY-ENCLOSED HEIGHT UP TO 9m - DRIVE-THROUGH MANUAL WASH STATION W/ STAIR AND PLATFORM FOR OPERATORS TO ACCESS TOP SIDE - VACUUM AND WASTE BIN - DESIGN VEHICLE: GARBAGE TRUCK	- SANITARY CATCH BASIN AND 150mm CB LEAD TO COLLECT WATER AND CONNECT TO EXISTING MH. CB AWAY FROM WHEEL PATH - STORMCEPTOR OIL-GRIT SEPARATOR BY LANGLEY CONCRETE - WATER CONNECTION - WASTE BIN	- HOT AND COLD WATER SUPPLY WITH HEAT TRACING: PIPE SIZES, FLOW RATE, PRESSURE - COMPRESSOR FOR SOAP MIXING AND AIR - VACUUM - HOT WATER HEATER FOR WASHBAY - GAS SUPPLY FOR HOT WATER HEATER	- POWER FOR MOTOR, PUMP, HEATER, VACUUM TO BE FED FROM NEW DISTRIBUTION PANEL AT NEW MECHANICAL ROOM - LIGHTING INSIDE WASH BAY UNDERNEATH THE CANOPY: LED LIGHT MODEL no. SCAN-SPS-SW-8 (TBD) SELECTABLE CANOPY LIGHT - NEW 3 PHASE SERVICE FOR THE NEW MECHANICAL ROOM TO HAVE A PROPOSED TIE IN FROM EX. 600V SPLITTER IN THE EX. MECHANICAL ROOM. - NEW 1 PHASE 10KVA TRANSFORMER FOR SECONDARY POWER - NEW 600V SPLITTER FOR 3 PHASE SERVICE CONNECTION.	- CONCRETE SLAB FOR WASH BAY - STAIRS AND PLATFORM INCLUDED TO WASH TRUCKS FROM ABOVE - COVERED CANOPY FOR WASH BAY BY SUPPLIER LINDOME STRUCTURES.	- CANOPY: HTTPS://LINDOMESTRUCTURES.COM/ - LOCK BLOCK: HTTPS://LOCKBLOCK.COM/ - STORMCEPTOR: HTTPS://WWW.LANGLEYCONCRETEGROUP.COM/PRODUCTS/STORMCEPTOR-PRODUCTS - STAIRS AND PLATFORM: HTTPS://SAFESMARTACCESS.CA/PREMIUM-SERIES-TRUCK-LOADING-ACCESS-PLATFORM - COMPRESSOR FOR SOAP MIXING AND AIR, WITH VACUUM: HTTPS://WWW.NOVICLEAN.CA/WP-CONTENT/UPLOADS/2022/09/SELF-SERVE-CAR-WASH-BROCHURE-DIGITAL.PDF - LIGHTING: ABOVEALL LIGHTING (TBD)
	3	BRINE MIXING UNIT	- INPUT WATER FLOWRATE TO BE 100GPM AT 100psi. CONNECTION WOULD BE A STANDARD HYDRANT CONNECTION. - MINIMUM FOOTPRINT OF 30 ft LENGTH x 12 ft DEPTH TO SET UP THE BRINE MAKER UNIT PLUS TWO BATCH TANKS. A DRIVEWAY MINIMUM WIDTH OF 3.5m IS REQUIRED NEXT TO THE BRINE UNIT SETUP SO THAT TRUCKS CAN DRIVE UP TO AND PARK PARALLEL NEXT TO IT AND FILL UP.	- WATER CONNECTION - ASPHALT SURFACE - 30 ft LENGTH x 12 ft DEPTH TO SET UP THE BRINE MAKER UNIT PLUS TWO BATCH TANKS - DRIVEWAY MINIMUM WIDTH OF 3.5m NEXT TO THE BRINE UNIT SETUP SO TRUCKS CAN DRIVE UP TO AND PARK PARALLEL NEXT TO IT AND FILL UP. - POTENTIAL FENCING - MINIMUM OVERHEAD CLEARANCE OF 15 ft HIGH	- WATER CONNECTION @ 100GPM AND 100psi FROM STANDARD HYDRANT. THE CURRENT WATER PRESSURE IS 80-90psi (AS PER UBC WATER AND UTILITIES) AND THE EXISTING COLD WATER LINE ON SITE IS 2". A NEW WATER SERVICE WILL BE REQUIRED INCLUDING A PRESSURE BOOSTER PUMP.	- LIGHTING TO BE PROVIDED NEARBY: LED LIGHT MODEL no. ARY-100-30-1-III-BK(TBD) ARRAY LED AREA LIGHT	N/A	- BRINE MIXING UNIT: HTTPS://WWW.BARRPLASTICS.COM/PRODUCTS/COMPLETE-BRINE-PRODUCTION-HANDLING-SYSTEMS - FENCING AND GATE: HTTPS://WWW.BLUEPINEENTERPRISES.COM/ - LIGHTING: ABOVEALL LIGHTING (TBD)
	4	RELOCATED PESTICIDE CONTROL UNIT	- RELOCATED PEST CONTROL UNIT (7' x 11')	- COMPACTED GRAVEL SURFACE	N/A	- LIGHTING TO BE PROVIDED NEARBY: LED LIGHT MODEL no. ARY-100-30-1-III-BK(TBD) ARRAY LED AREA LIGHT	CONCRETE SLAB FOR RELOCATED PESTICIDE CONTROL UNIT	- LIGHTING: ABOVEALL LIGHTING (TBD)
	5	NEW MECHANICAL ROOM	- EXISTING ROOM TO REMAIN, NEW ROOM IS NEEDED	- NEW SHED FOR MECHANICAL ROOM TO ACCOMMODATE HOT WATER TANK FOR EYE WASH AND PUMP (12' x 8')	- NEW 3" C/W WATER METER, PRESSURE REGULATOR, BACKFLOW PREVENTER (RPBA). - HOT WATER HEATER IN MECHANICAL ROOM FOR EMERGENCY SHOWER/EYEWASH. - GAS CONNECTION (695MBH) FOR HOT WATER HEATERS, C/W FORTISBC METER AND PRVS - NEW WATER CONNECTION W/ RPBAS (x2) TO EMERGENCY EYEWASH/SHOWER AND WASHBAY. - MECHANICAL ROOM SIZE: 12' X 8' (TBC) - 3KW ELECTRIC UNIT HEATER (208V/1) - HEAT TRACE: 4x 750W @208V/1 - NEW BOOSTER PUMP: 208V/1, 2-HP - DRAWDOWN TANK SIZE (SIZE TBC) - NEW HOT WATER RECIRCULATION PUMP (TBC DEPENDING ON EMERGENCY SHOWER/EYEWASH LOCATION)	- POWER FOR HEATER (SIZE: 3KW) (AS PER MECH LIST) - NEW LIGHT INSIDE THE MECHANICAL ROOM LED LIGHT MODEL no. SVP2-12-D-30-SW GEN.2 SELECTABLE LED VAPOR TIGHT - 50A 600V 3P DISTRIBUTION PANEL TO FEEL THE MOTORS FOR WASH BAY, BOOSTER PUMPS AND 1P DISTRIBUTION PANEL - 50A 120V/240V DISTRIBUTION PANEL TO FEED THE NEW SECONDARY LOADS AT THE NEW MECHANICAL ROOM AND WASH BAY AREA. - NEW 10kVA 1P 600V 120V/240V TRANSFORMER FOR SECONDARY LOADS.	- CONCRETE SLAB FOR NEW SHED	- SHED: HTTPS://JAWPORTABLEBUILDINGS.COM/?GAD_SOURCE=1&GCLID=CJ0KCQJWHR6_BHD4ARISAH1YDJCWG66BBRIYYHV6IPCBBKK-UEEKLBLOTUVC5SDVBN8QQ_J6N370HQBCAAODSEALW_WCB - HOT WATER HEATER: HTTPS://WWW.MAGIKIST.COM/PRODUCTS/HOT-WATER-HEATERS/HWG40-GAS-HOT-WATER-HEATERS/0532/HWG40-GAS-HEATER-ELECTRONIC-IGNITION-NATURAL-GAS - LIGHTING: ABOVEALL LIGHTING (TBD)
	6	EXISTING MECHANICAL ROOM	N/A	N/A	N/A	- EXISTING 5KVA TRANSFORMER TO REMAIN. - EXISTING LIGHTING TO REMAIN. - NEW 3 PH SERVICE FOR THE MECHANICAL ROOM TO HAVE A PROPOSED TIE-IN FROM EXISTING 600V SPLITTER IN THE EXISTING MECHANICAL ROOM.	N/A	- DISTRIBUTION PANEL: SIEMENS 60A, 30 POLE, SINGLE PHASE, 240V PANEL - TRANSFORMER: HAMMOND SOLUTIONS
	7	EYE WASH AND SHOWER	- GUARDIAN GFR3110 INTEGRATED EYE WASH AND EMERGENCY SHOWER	- SANITARY CATCHBASIN AND 150mm CB LEAD TO COLLECT SHOWER DISCHARGE. - LOCATION OF EYE WASH AND SHOWER STATION SHOULD BE UNOBSTRUCTED AND EASILY ACCESSIBLE/CLOSE TO PESTICIDE SHED - ASPHALT SURFACE - UNIT TO BE COVERED BY AN ENCLOSURE.	- HOT AND COLD WATER SUPPLY WITH HEAT TRACING (120V) - THERMOSTATIC MIXING VALVE - CURRENT DESIGN IS FOR 15 MINUTES RUNTIME (PER WORKSAFEBC). UBC TO CONFIRM RUN-TIME/DURATION REQUIREMENT IF DIFFER FROM WORKSAFEBC.	- 120 VAC SINGLE-PHASE POWER SUPPLY FOR HEAT TRACE	- CONCRETE SLAB FOR EYE WASH AND SHOWER	- EYE WASH AND SHOWER: HTTPS://WWW.GESAFETY.COM/PRODUCTS/FREEZE_RESISTANT/GFR3110.SHTML - THERMOSTATIC MIXING VALVE: (TBD)
	8	WEIGHT SCALE	- WESTERN SCALE CO. LTD BI-DIRECTIONAL PORTABLE TRUCK SCALE 30' x 10' WITH ASPHALT RAMPS	- ASPHALT RAMP - SIGNAGE	N/A	- COMMS. BETWEEN SCALE AND GATEHOUSE - POWER AND LIGHTING FOR SCALE AND GATE HOUSE FROM EXISTING SERVICE IN THE GATEHOUSE - WEIGHT TICKET DISPENSER - LED LIGHT MODEL no. ARY-100-30-1-III-BK(TBD) ARRAY LED AREA LIGHT	- FOUNDATION OF WEIGHT SCALE	- WEIGHT SCALE WITH DISPLAY AND TICKET DISPENSOR: HTTPS://WESTERNSCALE.CA/PRODUCTS.PHP MESSAGING SYSTEM FOR TRUCKS - LIGHTING: ABOVEALL LIGHTING (TBD)
	9	GATE HOUSE	- RELOCATED GATE HOUSE WITH STAIRS WILL ALSO FUNCTION AS SCALE HOUSE WITH TICKETING KIOSK TO DISPENSE WEIGHT TICKETS - EXISTING PANEL AND 10 kVA TRANSFORMER TO BE UTILIZED FOR: CCTV TO MONITOR TRUCK LOAD, WEIGH SCALE CONTROLLER, TICKET PRINTER. EXISTING GATEHOUSE LOADS, WEST EXTERIOR NEW LIGHT (CANOPY LIGHTING, AREA LIGHTING)	- WATER CONNECTION LEADING TO HOSE BIB.	- WATER CONNECTION LEADING TO HOSE BIB WITH HEAT TRACE.	- TELECOM AND DATA BETWEEN SCALE AND GATEHOUSE - POWER AND LIGHTING FOR SCALE AND GATE HOUSE FROM EXISTING SERVICE IN THE GATEHOUSE - CAMERA POINTING TO TRUCK -EXTERIOR LED LIGHT MODEL no. ARY-100-30-1-III-BK(TBD) ARRAY LED AREA LIGHT	- CONCRETE SLAB FOR RELOCATED GATE HOUSE	- CAMERA: TBD - LIGHTING: ABOVEALL LIGHTING (TBD)
WAREHOUSE YARD	10	EV CHARGING STALLS	- 5 PARKING STALLS, 2.6m x 6.3m - LEVEL 2 FLO CHARGERS, DUAL SETUP	-TWO (2) DUAL PEDESTAL AND ONE (1) SINGLE PEDESTAL CONFIGURATION FOR FIVE STALLS - FRONT OF PEDESTAL TO BE 1m AWAY FROM EDGE OF STALL - PARKING CURBS FOR VEHICLES - CONCRETE ISLAND FOR PEDESTALS	N/A	- POWER AND CONDUIT FOR FLO EV CHARGERS TO BE FED FROM NEW ELECTRICAL KIOSK - LIGHTING TO BE PROVIDED NEARBY - LED LIGHT MODEL NO. WL-26-30-1-PC (TBD) LED V-LINE WALL PACK - 2 x DUAL CoRe+ PEDESTALS WITH CABLE MANAGEMENT - 1 x SINGLE CoRe+ PEDESTALS WITH CABLE MANAGEMENT	- BASES FOR EV CHARGER PEDESTALS	- FLO: HTTPS://WWW.FLO.COM/EN-CA/PRODUCTS/ - LIGHTING: ABOVEALL LIGHTING (TBD)
	11	DIESEL TANKS	- 2 x 42,000 L TANKS WITH PROVISIONS FOR EXPANSION OF TWO (2) FUTURE TANKS. TANKS PLACED ON CONCRETE WITH STUB-OUTS FOR UNDERGROUND UTILITIES: FUEL DISPENSER, METER, MANUAL PUMP INTEGRATED WITH EX. FUEL DISPENSERS. SECONDARY CONTAINMENT FOR TANKS WITH DRAINAGE TO EXISTING SANITARY SYSTEM AND OGS	- STORMCEPTOR OIL-GRIT SEPARATOR AND SANITARY CONNECTION - CONCRETE MEDIAN AND BOLLARDS AT FUEL DISPENSER	- NEW 42,000L DIESEL TANK: 119" (W) X 131" (H) X 248" (L). - LEAK DETECTIONS (TANK AND SUMP), TRANSITION SUMPS, LEVEL INDICATORS, OVERFILL PROTECTION, GAUGES, ETC. - DUAL HOSES (SIDE LOAD), ONE DISPENSER FILL STATION - NEW TANK INTERCONNECTED WITH EXISTING TANK - 2 NEW SUBMERSIBLE PUMPS (STP), 3/4-HP, 208V/1	- POWER SUPPLY FOR DISPENSERS, METER TO BE FED FROM NEW ELECTRICAL KIOSK - LIGHTING TO BE PROVIDED NEARBY LED LIGHT MODEL no. ARY-100-30-1-III-BK(TBD) ARRAY LED AREA LIGHT - POWER FOR TRANSFER PUMPS	- CONCRETE FOUNDATIONS FOR DIESEL TANKS AND DISPENSER	- STORMCEPTOR: HTTPS://WWW.LANGLEYCONCRETEGROUP.COM/PRODUCTS/STORMCEPTOR-PRODUCTS - DIESEL TANK, RELOCATED: HTTPS://WWW.REGALTANKS.COM/OUR-PRODUCTS - DIESEL TANKS, NEW: HTTPS://MIPETROGROUP.COM/PRODUCTS/GASBOY/ - DISPENSER: HTTPS://WWW.FLEETDATASYSTEMS.COM/#/PRODUCTS/FUEL - LIGHTING: ABOVEALL LIGHTING (TBD)
	12	DIESEL REFUELING TRAILER	- DIESEL REFUELING TRAILER SUPPLIED BY UBC, NEED TO CONFIRM 2 - 20' CONTAINER FOOTPRINT	- ASPHALT SURFACE - DEDICATED SPOT WITH ADEQUATE SPACE TO MANEUVER TO AND FROM	N/A	N/A	N/A	N/A
	13	STORAGE SEACANS	- RELOCATE EXISTING 1 - 40' AND 5 - 20' SEACANS. DISPOSE OF 4 - 20' SEACANS AND 2 - 40' SEACANS	- GRAVEL SURFACE	N/A	N/A	N/A	N/A
	14	RACKING UNIT	- MINIMUM FOOT PRINT OF THE COVERED STORAGE TO BE 150 ft LENGTH x 18 ft DEPTH - AS THE ROOF OF THE STORAGE WILL BE SLOPED, THE HIGH POINT ON THE BACK OF THE STORAGE WOULD BE 18 ft HIGH (MIN.) AND THE LOW POINT ON THE FRONT OF THE STORAGE WOULD BE 16ft HIGH (MIN.) - BACKSIDE OF STORAGE SHOULD BE COVERED AND SHIELDED FROM ELEMENTS - HALF OF COVERED STORAGE (75 ft) SHOULD BE CAGED WITH LARGE DUAL SWING DOORS (SPACING BETWEEN DOORS TBC). THE REMAINING HALF OF THE COVERED STORAGE (75 ft) SHOULD BE OPENED AND NOT CAGED IN. - THE DEPTH OF THE STORAGE WOULD BE 18 ft THROUGHOUT - RACKING SHOULD RUN THE LENGTH OF THE COVERED STORAGE (150 ft) AND HAVE A MINIMUM DEPTH OF 4 ft TO ACCOMMODATE PALLETS - RACKING SHOULD HAVE MAX HEIGHT OF 18 ft WITH MINIMUM OF 3 SHELVES THAT ARE HEIGHT ADJUSTABLE	- GRADING - CHAIN LINK FENCE AND GATES	N/A	- LIGHTING ON RACKING LED LIGHT no. SCAN-SPS-SW-8 (TBD) SELECTABLE CANOPY LIGHT	- CONCRETE BASE OR FOUNDATION FOR RACKING - COVERED CANOPY FOR SHELVING AREA BY SUPPLIER LINDOME STRUCTURES.	- FENCING AND GATE: HTTPS://WWW.BLUEPINEENTERPRISES.COM/ - CANTILEVER RACKING: HTTPS://WWW.COMMANDER.CA/PRODUCT-CANTILEVER-RACKING/ - LIGHTING: ABOVEALL LIGHTING (TBD)
	15	COMPRESSED NATURAL GAS FUEL STATION	- CNG TYPE (FAST-FILL OR SLOW-FILL) BY JORDAIR TO BE CONFIRMED BY UBC - DISPENSER ISLAND WITH VEHICLE FOOTPRINT: 1 FUEL DISPENSER ISLAND WITH TWO PUMPS TOTAL WITH ALLOWANCE FOR ONE OVERSIDE VEHICLE TO PULL-UP EITHER SIDE, FREIGHTLINER	- CONCRETE MEDIAN AND BOLLARDS AT DISPENSER	- NEW INCOMING 103KPA / 15PSI GAS (SIZE BY UBC EWS) - NEW GAS METER AND PRV - NEW 25 DIA (34.5KPA / 5PSI, 774KW/2640 MBH) GAS DOWNSTREAM OF NEW PRV TO CNG FILL.	- POWER SUPPLY FOR DISPENSERS, METER, CARD READER - 2 x 20HP COMPRESSOR REQUIRES 600V 3-PHASE AND 120V/240V 1-PHASE FOR SECONDARY POWER FOR CNG SYSTEM TO BE FED FROM NEW ELECTRICAL KIOSK - LIGHTING TO BE PROVIDED NEARBY LED LIGHT MODEL NO. ARY-100-30-1-III-BK(TBD) ARRAY LED AREA LIGHT	- CONCRETE BASE OR FOUNDATION FOR THE CNG STATION	- CNG SUPPLIER: HTTPS://WWW.JORDAIR.CA/ - CNG METER AND CARD READER: JORDAIR - LIGHTING: ABOVEALL LIGHTING (TBD)
	16	CNG ELECTRICAL ROOM & STANDBY GENERATOR	N/A	N/A	N/A	- 25KVA 1P TRANSFORMER 600V-120V/240V - 100A DISTRIBUTION PANEL TO FEED ALL NEW WAREHOUSE YARD AREA SECONDARY LOADS. - 3KW ELECTRICAL ROOM HEATER (TBD) -KIOSK LED LIGHTING no. ZL1D-L24-1500LM-FST-MVOLT-30K-90CRI - 80KW 3 PHASE, 600V DIESEL GENERATOR	N/A	- ELECTRICAL KIOSK: VALID MANUFACTURING - DISTRIBUTION PANEL: SIEMENS 125A, 42 POLE, 3 PHASE, 600V PANEL -TRANSFORMER: HAMMOND SOLUTIONS - STANDBY GENERATOR: TBC IF UBC SUPPLIED OR NEW.
GENERAL	17	SITE LIGHTING	- ADEQUATE SITE LIGHTING FOR SECURITY	- LIGHTING TO BE AWAY FROM VEHICULAR PATH	N/A	- LED LIGHT MODEL no. ARY-100-30-1-III-BK (TBD) ARRAY LED AREA LIGHT	N/A	- LIGHTING: ABOVEALL LIGHTING (TBD)
	18	ROAD SURFACE	- ASPHALT VS. GRAVEL	- ASPHALT TO BE PROVIDED UNLESS NOTED OTHERWISE (PAVEMENT STRUCTURE: 75mm OF ASPHALT COURSE, 150mm OF 19mm BASE COURSE, 300mm OF 75mm SUBBASE COURSE)	N/A	N/A	N/A	N/A

Rev	Date	Description	Drawn	Design	App'd
B	2025-06-13	ISSUED FOR DEVELOPMENT PERMIT	AA	KY	VT
A	2025-05-16	ISSUED FOR 100% DEVELOPMENT DESIGN	AA	KY	VT

THE UNIVERSITY OF BRITISH COLUMBIA

ORIGINAL DWG SIZE: ANSI D (22" x 34")

McElhanney
Suite 200
858 Beatty Street
Vancouver BC
Canada V6B 1C1
T 604 683 8521

PRELIMINARY NOT FOR CONSTRUCTION

THIS DRAWING HAS NOT BEEN APPROVED AND MAY CONTAIN ERRORS AND OMISSIONS

THE UNIVERSITY OF BRITISH COLUMBIA
6200 UNIVERSITY BLVD, VANCOUVER, BC V6T 1Z4

UBC SOUTH CAMPUS WORKS YARD

DESIGN ELEMENT INFORMATION

Drawing No. C403

Project Number 2121-01293-00

Rev. B

DESTROY ALL PRINTS BEARING PREVIOUS REVISION

DATE: 2025-06-13, 18:04 FILE: X:\2121\Projects\212101293\00 UBC South Campus Work Yard\07_DRAWINGS\01_Sheets\01293-C0-403.dwg
McElhanney ANSI D - 2021-09-14

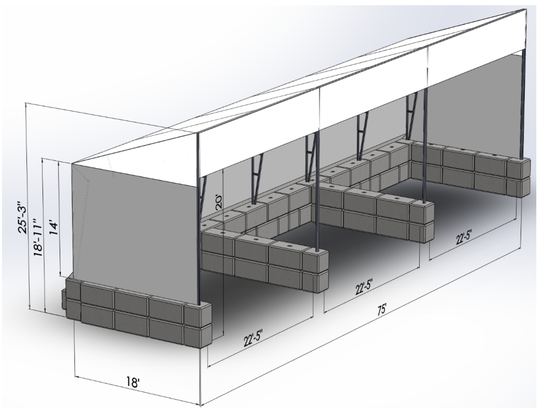

1 LINEDOME STRUCTURE FOR BULK MATERIALS (SOIL, SAND AND SALT/SAND)

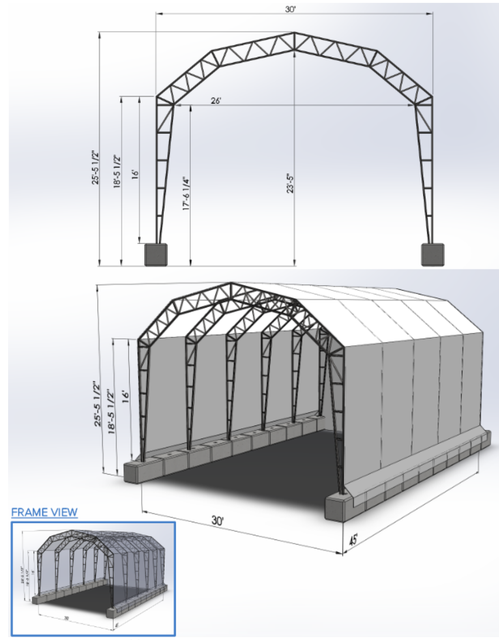

2 LINEDOME STRUCTURE FOR WASHBAY (OPEN 2 SIDES)

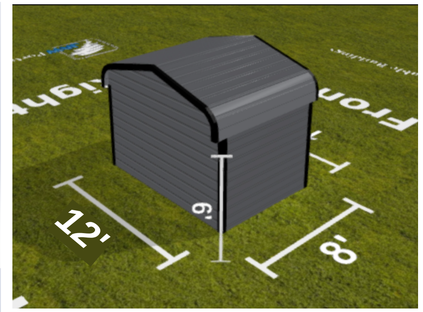

5 JAW PORTABLE BUILDING FOR NEW MACHANICAL ROOM

7 GUARDIAN GFR3110 EMERGENCY EYE WASH STATION

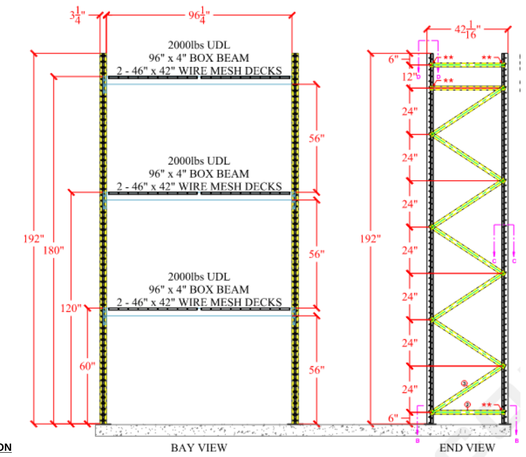

14 COMMANDER WAREHOUSE PALLET RACKING UNIT

8 WESTERN SCALE ELIMINATOR CONCRETE DECK TRUCK SCALE

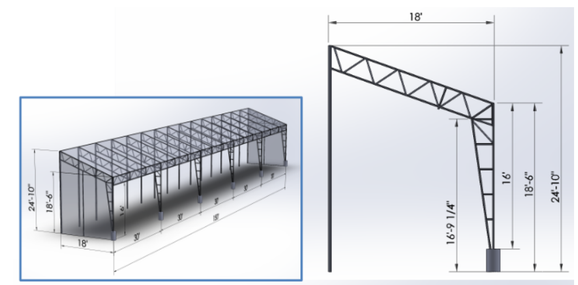

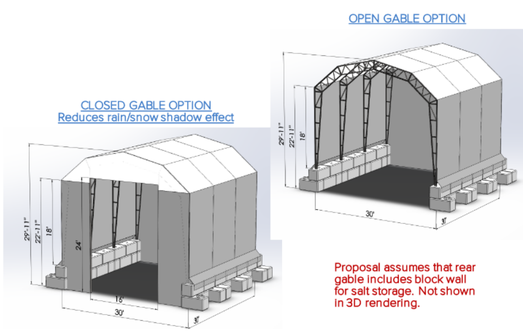

LINEDOME STRUCTURE FOR BULK MATERIALS (SALT)

2 SAFE SMART ACCESS SUPER MAINTENANCE PLATFORM FOR WASHBAY

5 MAGIKIST AND AO SMITH HOT WATER HEATERS FOR WASHBAY AND EMERGENCY EYEWASH STATION

15 JORDAIR NGV DUPLEX GAS-PACK FUELING SYSTEM

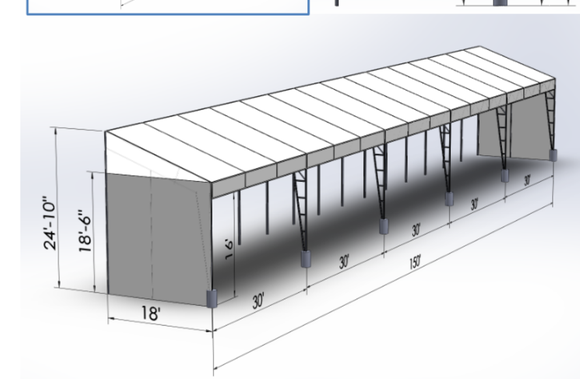

14 LINDOME STRUCTURE FOR COVERED WAREHOUSE RACKING

Rev	Date	Description	Drawn	Design	App'd
B	2026-05-13	ISSUED FOR DEVELOPMENT PERMIT	AA	KY	VT
A	2025-05-16	ISSUED FOR 100% DEVELOPMENT DESIGN	AA	KY	VT

INFORMATION ON EXISTING UNDERGROUND FACILITIES MAY NOT BE COMPLETE OR ACCURATE. McELHANNEY, ITS EMPLOYEES AND DIRECTORS ARE NOT RESPONSIBLE NOR LIABLE FOR THE LOCATION OF ANY UNDERGROUND CONDUITS, PIPES, CABLES OR OTHER FACILITIES WHETHER SHOWN OR OMITTED FROM THIS PLAN. PRIOR TO CONSTRUCTION CONTRACTOR SHALL EXPOSE LOCATIONS OF ALL EXISTING FACILITIES BY HAND DIGGING OR HYDROVAC AND ADVISE THE ENGINEER OF POTENTIAL CONFLICTS.

THE UNIVERSITY OF BRITISH COLUMBIA

ORIGINAL DWG SIZE: ANSI D (22" x 34")

McElhanney
Suite 200
858 Beatty Street
Vancouver BC
Canada V6B 1C1
T 604 683 8521

PRELIMINARY NOT FOR CONSTRUCTION

THIS DRAWING HAS NOT BEEN APPROVED AND MAY CONTAIN ERRORS AND OMISSIONS

THE UNIVERSITY OF BRITISH COLUMBIA
6200 UNIVERSITY BLVD, VANCOUVER, BC V6T 1Z4

UBC SOUTH CAMPUS WORKS YARD

DESIGN ELEMENT INFORMATION

Drawing No. C404

Project Number 2121-01293-00

Rev. B

DATE: 2025-05-16, 14:52 FILE: X:\2121\Projects\212101293\00 UBC South Campus Work Yard\07_DRAWINGS\01_Sheets\01293-C0-404.dwg

McElhanney ANSI D - 2021-09-14

DESTROY ALL PRINTS BEARING PREVIOUS REVISION

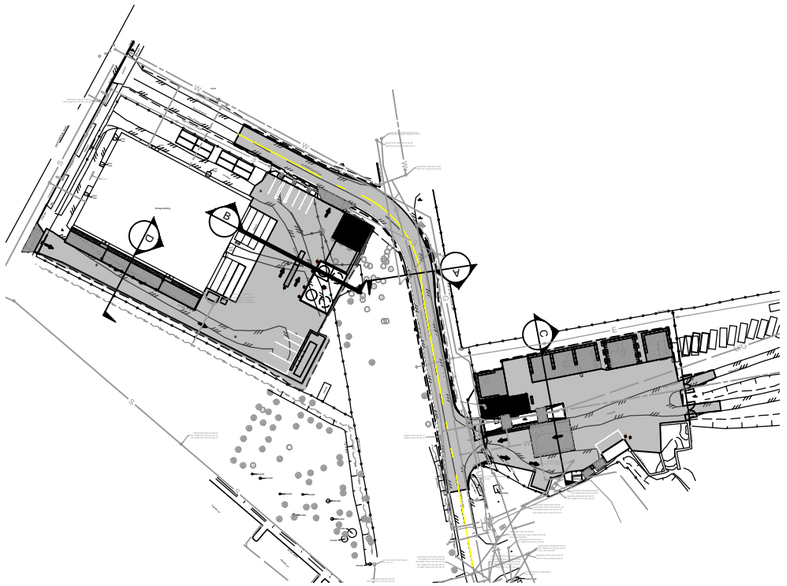

OVERALL SITE PLAN
SCALE 1:1000

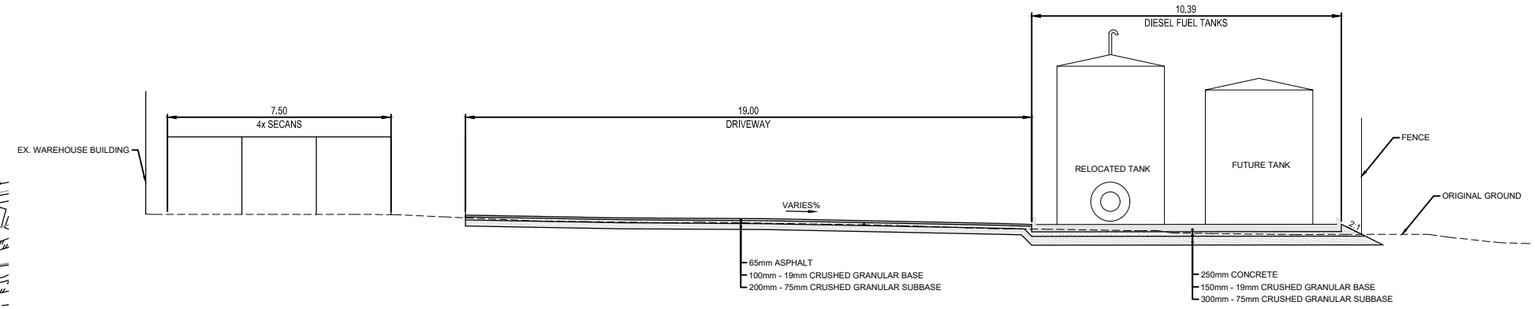

B WAREHOUSE TYPICAL SECTION
SCALE H 1:100

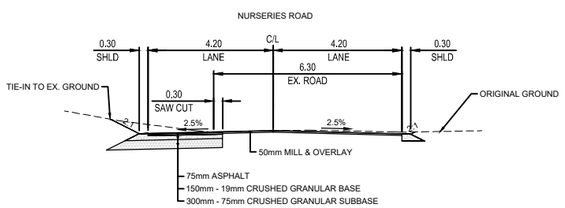

A NURSERIES ROAD WIDENING TYPICAL SECTION
SCALE H 1:100

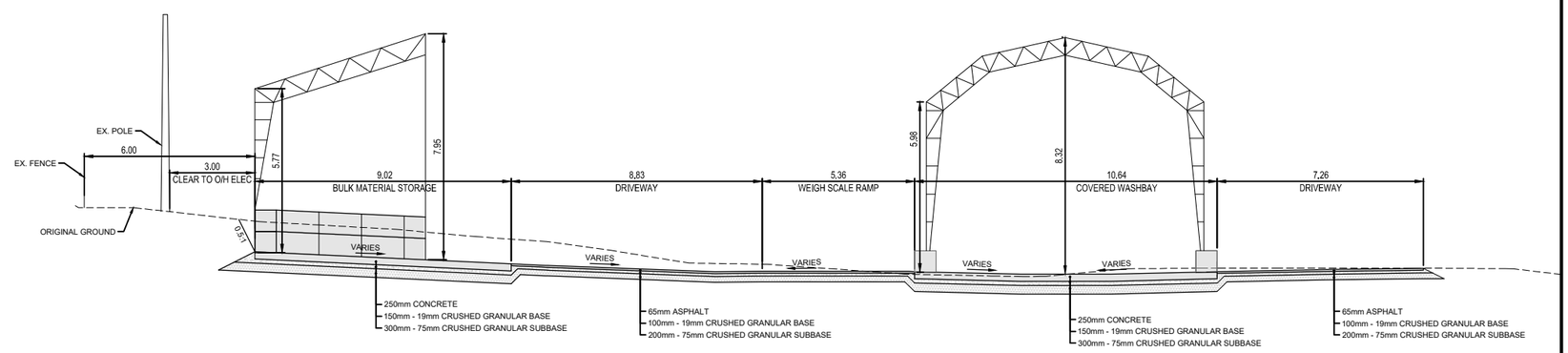

C MATERIAL RECOVERY FACILITY TYPICAL SECTION
SCALE H 1:100

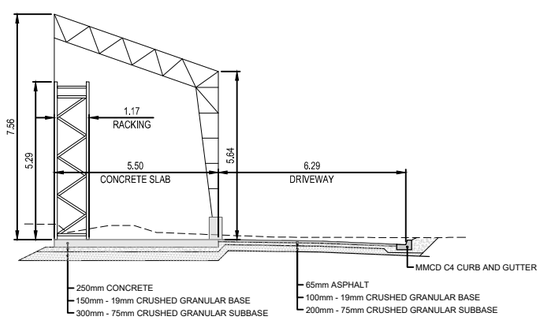

D WAREHOUSE RACKING TYPICAL SECTION
SCALE H 1:100

Rev	Date	Description	Drawn	Design	App'd
A	2025-06-13	ISSUED FOR DEVELOPMENT PERMIT	KY	KY	VT

THE UNIVERSITY OF BRITISH COLUMBIA

PRINTED HALF SIZE (11" x 17")
ORIGINAL DWG SIZE: ANSI D (22" x 34")

McElhanney
Suite 200
858 Beatty Street
Vancouver BC
Canada V6B 1C1
T 604 683 8521

PRELIMINARY
NOT FOR
CONSTRUCTION

THIS DRAWING HAS NOT BEEN APPROVED AND MAY CONTAIN ERRORS AND OMISSIONS

THE UNIVERSITY OF BRITISH COLUMBIA
6200 UNIVERSITY BLVD, VANCOUVER, BC V6T 1Z4

UBC SOUTH CAMPUS WORKS YARD

TYPICAL SECTIONS

Drawing No.
C501

Project Number
2121-01293-00

Rev.
A

DATE: 2025-06-13, 17:04 FILE: X:\2121\Projects\2121\01293\00 UBC South Campus Work Yard\07_DRAWINGS\01_Sheets\01293-C0-501.dwg

McElhanney ANSI D - 2021-09-14

DESTROY ALL PRINTS BEARING PREVIOUS REVISION

SINGLE LINE SYMBOL SCHEDULE

SYMBOL	DESCRIPTION	NOTES
	BREAKER	
	FUSE	
	DISCONNECT SWITCH	
	DISCONNECT SWITCH (FUSED) / FUSED SWITCH	
	FUSED CUTOUT (PRIVATE)	
	FUSED CUTOUT (SERVICE AUTHORITY)	
M	CURRENT TRANSFORMER (WITH METER) - LETTER DENOTES TYPE	
M	METER - LETTER DENOTES TYPE	
	TRANSFORMER	
	TRANSFORMER (Δ-Y)	
S N	TRANSFER SWITCH	
	MOTOR / EQUIPMENT	
MAIN	PANEL - MAIN BREAKER AS INDICATED	
	INDUCTIVE REACTOR	
	GENERATOR	
	LIGHTING ARRESTOR	
	GROUND	
3c #1/0	CONDUCTOR/FEEDER INFORMATION	

POWER & COMMUNICATION SYMBOL SCHEDULE

SYMBOL (WALL / ABOVE COUNTER / FLOOR / CEILING)	DESCRIPTION	NOTES
	15 AMP, 125V DUPLEX RECEPTACLE	
	15 AMP, 125V DUPLEX GROUND FAULT RECEPTACLE (GFCI)	
	15 AMP, 125V DUPLEX ARC FAULT PROTECTED REC. (AFCI)	
	15/20 AMP, 125V DUPLEX RECEPTACLE	
	15/20 AMP, 125V DUPLEX GROUND FAULT RECEPTACLE (GFCI)	
	15/20 AMP, 125V DUPLEX ARC FAULT PROTECTED REC. (AFCI)	
	15 AMP, 125V QUAD RECEPTACLE	
	15/20 AMP, 125V QUAD RECEPTACLE	
	SPECIAL RECEPTACLE AS NOTED ON PLANS	
	SPECIAL POWER CONNECTION AS NOTED ON PLANS	
	50 AMP, 125/250V RANGE RECEPTACLE	
	TELEPHONE OUTLET	
	DATA OUTLET	
	COMBINATION COMMUNICATION OUTLET (#x TEL, #x DATA, #x HDMI/CATV)	
	TELEVISION OUTLET (HDMI / CATV AS NOTED)	
	SPECIAL COMMUNICATION OUTLET AS NOTED ON PLANS	
	PARKING PEDESTAL REFER TO DETAIL	
	MOTOR DISCONNECT SWITCH	
JB	JUNCTION BOX	
	GROUND REFERENCE BUSBAR	
	PANELBOARD - REFER TO PANEL SCHEDULES FOR DETAILS	
	LOW VOLTAGE LIGHTING CONTROL PANEL	
XX-XXX	EQUIPMENT TAG REFER TO MECHANICAL EQUIPMENT SCHEDULE	
T	THERMOSTAT (T-STANDARD, RT-REVERSE ACTING, DH-DEHUMIDISTAT)	

ER - EXISTING TO REMAIN
RL - RELOCATE EXISTING DEVICE AS INDICATED
RM - REMOVE EXISTING DEVICE
RR - REMOVE EXISTING DEVICE AND REPLACE WITH NEW
WP - WEATHERPROOF ENCLOSURE

LIGHTING SYMBOL SCHEDULE

SYMBOL	DESCRIPTION	NOTES
A	LUMINAIRE OF TYPE 'A' REFER TO LUMINAIRE SCHEDULE FOR DETAILS	
A	LUMINAIRE OF TYPE 'A' REFER TO LUMINAIRE SCHEDULE FOR DETAILS	
A	LUMINAIRE OF TYPE 'A' ON EMERGENCY POWER REFER TO LUMINAIRE SCHEDULE FOR DETAILS	
A	LUMINAIRE OF TYPE 'A' ON EMERGENCY POWER REFER TO LUMINAIRE SCHEDULE FOR DETAILS	
A	WALL MOUNT LUMINAIRE OF TYPE 'A' REFER TO LUMINAIRE SCHEDULE FOR DETAILS	
A	POLE/POST MOUNT LUMINAIRE OF TYPE 'A' REFER TO LUMINAIRE SCHEDULE FOR DETAILS	
A	TRACK MOUNT LUMINAIRE OF TYPE 'A' REFER TO LUMINAIRE SCHEDULE FOR DETAILS	
	EMERGENCY LIGHTING - REMOTE HEAD - WALL MOUNT C/W TWO (2) 3W (300 LUMEN) LED HEADS	
	EMERGENCY LIGHTING - REMOTE HEAD - CEILING MOUNT C/W TWO (2) 3W (300 LUMEN) LED HEADS	
a	EMERGENCY LIGHTING - REMOTE HEAD - WALL MOUNT C/W TWO (2) 3W(300 lm)LED HEADS - LETTER DENOTES BATTERY	
a	EMERGENCY LIGHTING - REMOTE HEAD - CEILING MOUNT C/W TWO (2) 3W(300 lm)LED HEADS - LETTER DENOTES BATTERY	
	EMERGENCY LIGHTING - BATTERY PACK C/W TWO (2) 3W (300 LUMEN) LED HEADS	
EX1	EXIT SIGN OF TYPE 'EX1' WITH EMERGENCY HEADS REFER TO EXIT SIGN SCHEDULE FOR DETAILS	
EX1	EXIT SIGN OF TYPE 'EX1' REFER TO EXIT SIGN SCHEDULE FOR DETAILS	
$	LIGHTING SWITCH - LOW VOLTAGE UNLESS OTHERWISE NOTED	
	DIMMER SWITCH - ELECTRONIC WITH PRESET	
$	MASTER OVERRIDE SWITCH	
OS	OCCUPANCY SENSOR OF TYPE 'OS1' REFER TO OCCUPANCY SENSOR SCHEDULE FOR DETAILS	

PC - PHOTOCELL
TC - TIMECLOCK
DS - DAYLIGHT SENSOR
3 - 3-WAY SWITCHING

LUMINAIRE TAG SCHEME: A-##-a
PANEL - CIRCUIT - SWITCH

SECURITY SYMBOL SCHEDULE

SYMBOL	DESCRIPTION	NOTES
DC	DOOR CONTACT	
CR	CARD READER	
PB	HANDICAP DOOR OPENER (PUSH BUTTON)	
KP	KEYPAD	
GB	GLASS BREAK DETECTOR	
PDO	POWERED DOOR OPENER	
MAG	MAGNETIC DOOR HOLDER/LOCK	
EDS	ELECTRONIC DOOR STRIKE	
SAP	SECURITY ALARM PANEL	
	PASSIVE INFRARED MOTION SENSOR	
	SECURITY CAMERA	
	ALARM SIREN/HORN	

- ALL SECURITY LOCATIONS ARE TO BE ROUGH-IN ONLY.
- REFER TO SECURITY DEVICE LAYOUT FOR TYPICAL LOCATIONS, COORDINATE EXACT LOCATIONS ON SITE WITH SECURITY CONTRACTOR.

ABBREVIATIONS:

MRF	MATERIAL RECOVERY FACILITY
WY	WORKS YARD/WAREHOUSE YARD
EX.	EXISTING
CNG	COMPRESSED NATURAL GAS
FD	FUEL DISPENSER
HWT	HOT WATER TANK
WB	WASHBAY
HT	HEAT TRACE
EW	EYE WASH

REVISION B NOTES:

1. DRAWINGS E100, E101, AND E103 INCORPORATE THE LIGHTING LAYOUT AND INFORMATION REQUIRED FOR THE DEVELOPMENT PERMIT APPLICATION. DRAWINGS E102 AND E900 ARE NOT REQUIRED FOR THE DEVELOPMENT PERMIT AND DO NOT INCORPORATE THE LIGHTING LAYOUT AND INFORMATION.
2. UBC COMMENTS FROM REV. A – 100% DEVELOPMENT DESIGN DRAWINGS ARE NOT ADDRESSED IN THIS REVISION AND WILL BE INCORPORATED IN THE FOLLOWING DRAWING SUBMISSION.

DRAWING LIST

NO.	TITLE	SCALE
E100	SYMBOLS AND DRAWING INDEX	NOT TO SCALE
E101	TYPICAL DETAILS & SCHEDULES	NOT TO SCALE
E102	SINGLE LINE DIAGRAM	NOT TO SCALE
E103	SITE LAYOUTS	1:250
E900	SPECIFICATIONS	NOT TO SCALE

Rev	Date	Description	Drawn	Design	App'd
B	2025-06-13	ISSUED FOR DEVELOPMENT PERMIT	MA	MA	EH
A	2025-05-16	ISSUED FOR 100% DEVELOPMENT DESIGN	MA	MA	MB

INFORMATION ON EXISTING UNDERGROUND FACILITIES MAY NOT BE COMPLETE OR ACCURATE. McELHANNEY, ITS EMPLOYEES AND DIRECTORS ARE NOT RESPONSIBLE NOR LIABLE FOR THE LOCATION OF ANY UNDERGROUND CONDUITS, PIPES, CABLES OR OTHER FACILITIES WHETHER SHOWN OR OMITTED FROM THIS PLAN. PRIOR TO CONSTRUCTION CONTRACTOR SHALL EXPOSE LOCATIONS OF ALL EXISTING FACILITIES BY HAND DIGGING OR HYDROVAC AND ADVISE THE ENGINEER OF POTENTIAL CONFLICTS.

THE UNIVERSITY OF BRITISH COLUMBIA

ORIGINAL DWG SIZE: ANSI D (22" x 34")

McElhanney
Suite 200
858 Beatty Street
Vancouver BC
Canada V6B 1C1
T 604 683 8521

PRELIMINARY NOT FOR CONSTRUCTION

THIS DRAWING HAS NOT BEEN APPROVED AND MAY CONTAIN ERRORS AND OMISSIONS.

THE UNIVERSITY OF BRITISH COLUMBIA
6200 UNIVERSITY BLVD, VANCOUVER, BC V6T 1Z4

UBC SOUTH CAMPUS WORKS YARD
ELECTRICAL
SYMBOLS AND DRAWING INDEX

Drawing No. E100
Project Number 2121-01293-00
Rev. B

DESTROY ALL PRINTS BEARING PREVIOUS REVISION

MECHANICAL EQUIPMENT SCHEDULE

UNIT No.	UNIT DESCRIPTION	LOCATION	LOAD HP	LOAD kW	LOAD FLA	VOLT	PHASE	MOTOR STARTER	STARTER LOCATION	CONTROL	DISC. SWITCH	CIRCUIT No.	FEEDER	BREAKER	NOTES / REMARKS
CMP-1	CNG COMPRESSOR 1	WY CNG MECH RM	20	--	22	575	3	DOL	--	PRESSURE	X	--	3c #10	50A 3P	--
CMP-2	CNG COMPRESSOR 2	WY CNG MECH RM	20	--	22	575	3	DOL	--	PRESSURE	X	--	3c #10	50A 3P	--
P-WY-1	FUEL TRANSFER PUMP 1	WY DIESEL TANK	0.75	--	3.2	240	1	PCS	--	LEVEL	X	--	3c #12	15A 2P	--
P-WY-2	FUEL TRANSFER PUMP 2	WY DIESEL TANK	0.75	--	3.2	240	1	PCS	--	LEVEL	X	--	3c #12	15A 2P	--
FD-WY-1	FUEL DISPENSER	WY DIESEL DISP.	--	--	--	120	1	--	--	--	--	--	2c #12	15A 1P	--
EW-MRF-1	EM. EYEWASH & SHOWER ELEC.	EYEWASH STN	--	--	--	120	1	--	--	--	--	--	3c #12	15A 1P	--
HMC-MRF-1	HEAT TRACE U/G PIPING	MRF AREA	--	--	--	240	1	--	--	TEMP	--	--	2c #12	15A 2P	--
P-MRF-1	BOOSTER PUMP 1	--	3	--	--	575	3	VFD	--	PRESSURE	X	--	3c #12	15A 3P	--
P-MRF-2	BOOSTER PUMP 2	--	3	--	--	575	3	VFD	--	PRESSURE	X	--	3c #12	15A 3P	--
HWT-1	HOT WATER TANK	MRF NEW MECH RM	--	--	--	120	1	--	--	--	--	--	2c #12	15A 1P	--
HT-MRF-1	HOSE BIB HEAT TRACE	MRF AREA	--	--	--	120	1	--	--	TEMP	--	--	2c #12	15A 1P	--
HT-WB-1	WASHBAY HEAT TRACE	MRF WASHBAY	--	--	--	120	1	--	--	TEMP	--	--	2c #12	15A 1P	--
P-WB-1	WASHBAY PUMP	MRF WASHBAY	5	--	5.3	575	3	DOL	--	PRESSURE	X	--	3c #12	15A 3P	--
--	--	--	--	--	--	--	--	--	--	--	--	--	--	--	--

NOTES:

1. CONFIRM FINAL SIZES AND LOCATIONS OF ALL EQUIPMENT PRIOR TO ORDERING ELECTRICAL EQUIPMENT OR ROUGH-IN.
2. ALL FEEDER AND BREAKER SIZES ARE TO BE CONFIRMED WITH MECHANICAL SHOP DRAWINGS PRIOR TO ORDERING EQUIPMENT. POWER REQUIREMENTS FOR SUBMITTED ALTERNATE EQUIPMENT ARE THE RESPONSIBILITY OF THE CONTRACTOR(S) AND ASSOCIATED COSTS ARE THE RESPONSIBILITY OF THE CONTRACTOR(S).

PANEL 6B (PROPOSED)

MOUNTING - WALL
LOCATION - MRF AREA - NEW MECH ROOM
FEEDER PANEL - EX. 600V SPLITTER (EX. MECH ROOM)
FEEDER BKR - 50A 3P

FEEDER SIZE - 3c #8
VOLTAGE - 600V 3Ø 4W
MAIN BUS - EX. 600V SPLITTER (EX. MECH ROOM)
MAIN BREAKER - 50A 3P

NOTE	DESCRIPTION	BKR	CIRCUIT		BKR	DESCRIPTION	NOTE
--	WASHBAY PUMP (P-WB-1)	15	01	02	50	PANEL 2B	--
--		15	03	04	50		--
--		15	05	06	60	SURGE PROTECTOR	--
--	BOOSTER PUMP (P-MRF-1)	15	07	08	60		--
--		15	09	10	60		--
--		15	11	12	--	--	--
--		15	13	14	--	--	--
--	BOOSTER PUMP (P-MRF-2)	15	15	16	--	--	--
--		15	17	18	--	--	--
--	--	--	19	20	--	--	--
--	--	--	21	22	--	--	--
--	--	--	23	24	--	--	--

PANEL 2B (PROPOSED)

MOUNTING - WALL
LOCATION - MRF - NEW MECH. ROOM
FEEDER PANEL - PANEL 6B
FEEDER BKR - 40A 2P

FEEDER SIZE - 3c #10
VOLTAGE - 120V/240V 1PH
MAIN BUS - 60A
MAIN BREAKER - 60A 2P

NOTE	DESCRIPTION	BKR	CIRCUIT		BKR	DESCRIPTION	NOTE
--	UNIT HEATER	15	01	02	15	LIGHTING	--
--		15	03	04	15	AREA LIGHTING	--
--	EW-MRF-1	15	05	06	15	HEAT TRACE	--
--	HWT-1	15	07	08	15	SPARE	--
--	RECEPTACLES	15	09	10	15	SPARE	--
--	EXTERIOR RECEP.	15	11	12	15	SPARE	--
--	--	--	13	14	--	--	--
--	--	--	15	16	--	--	--
--	--	--	17	18	--	--	--
--	--	--	19	20	--	--	--
--	--	--	21	22	--	--	--
--	--	--	23	24	--	--	--

PANEL 2A (PROPOSED)

MOUNTING - WALL
LOCATION - CNG TRAILER ELEC. ROOM
FEEDER PANEL - N/A
FEEDER BKR - 50A 2P

FEEDER SIZE -3c #1
VOLTAGE - 120V/240V 1PH
MAIN BUS - 100A
MAIN BREAKER - 100A 2P

NOTE	DESCRIPTION	BKR	CIRCUIT		BKR	DESCRIPTION	NOTE
--	TRANSFER PUMP 1(P-WY-1)	15	01	02	15	UNIT HEATER	--
--		15	03	04	15		--
--	TRANSFER PUMP 2(P-WY-2)	15	05	06	15	LIGHTING	--
--		15	07	08	15	AREA LIGHTING	--
--	FUEL DISPENSER (FD-WY-1)	15	09	10	15	RECEPTACLES	--
--	SURGE PROTECTOR	30	11	12	--	--	--
--		30	13	14	--	--	--
--	--	--	15	16	--	--	--
--	--	--	17	18	--	--	--
--	--	--	19	20	--	--	--
--	--	--	21	22	--	--	--
--	--	--	23	24	--	--	--

EX. GATEHOUSE PANEL

MOUNTING - WALL
LOCATION - GATEHOUSE
FEEDER PANEL - N/A
FEEDER BKR - 60A 2P

FEEDER SIZE - EXISTING
VOLTAGE - 120V/240V 1PH
MAIN BUS - N/A
MAIN BREAKER - 60A 2P

NOTE	DESCRIPTION	BKR	CIRCUIT		BKR	DESCRIPTION	NOTE
--	--	--	01	02	15	LOADING CAMERA	--
--	--	--	03	04	15	COMMS. RACK	--
--	--	--	05	06	15	WEIGH SCALE SYSTEM	--
--	--	--	07	08	15	CANOPY & AREA LIGHTS - WEST	--
--	--	--	09	10	--	--	--
--	--	--	11	12	--	--	--
--	--	--	13	14	--	--	--
--	--	--	15	16	--	--	--
--	SPARE	15	17	18	--	--	--
--	GATE CAMERA	15	19	20	--	--	--
--	RECEPTACLES	15	21	22	15	RECEPTACLES	--
--	EXTERIOR RECEPTACLES	15	23	24	15	UNIT HEATER	--
--	LIGHTS	15	25	26	15		--
--	--	--	27	28	60	MAIN BREAKER	--
--	--	--	29	30	60		--

LUMINAIRE SCHEDULE

TYPE	DESCRIPTION	LAMPING	MOUNTING	REMARKS
A1	150W, AREA LIGHTING LED, WITH BI-LEVEL DIMMING	LED 22,500 lm 4000 K	POLE 9.1m AFG	ABOVE ALL LIGHTING ARY-150-40-1-MSW-PC-IV SLIP FITTER:ARY-SF-S
A2	240W, AREA LIGHTING LED, WITH BI-LEVEL DIMMING	LED 35,700 lm 4000 K	POLE 9.1m AFG	ABOVE ALL LIGHTING ARY-240-40-1-MSW-PC-IV SLIP FITTER:ARY-SF-S
B1	60W, CANOPY LED, WITH BI-LEVEL DIMMING	LED 8,500 lm 4000 K	PENDANT	ABOVE ALL LIGHTING SCAN-SPL-SW-8-MSW C/W PENDANT STEM
B2	80W, CANOPY LED, WITH BI-LEVEL DIMMING	LED 11,800 lm 4000 K	PENDANT	ABOVE ALL LIGHTING SCAN-SPL-SW-8-MSW C/W PENDANT STEM
C1	60W, AREA LIGHTING LED	LED 7,200 lm 4000 K	SURFACE 6m AFG	ABOVE ALL LIGHTING SMT-60-40-1-MS-L3B-TR-T4
C2	75W, AREA LIGHTING LED	LED 8,800 lm 4000 K	SURFACE 6m AFG	ABOVE ALL LIGHTING SMT-80-40-1-MS-L3B-TR-T4
D	30W, VAPORTITE LED	LED 4,200 lm 4000 K	CEILING	ABOVE ALL LIGHTING SVP2-12-D-50SP-SW-1

NOTE: CONTRACTOR TO CONFIRM SITE CONDITIONS PRIOR TO ORDERING LUMINAIRES.

PC - PHOTOCELL
TC - TIMECLOCK
DS - DAYLIGHT SENSOR
OC - OCCUPANCY SENSOR

NOTES:

1. ITEMS SHOWN IN GREY ARE EXISTING EQUIPMENT, WHILE ITEMS AND EQUIPMENT SHOWN IN BLACK INDICATE NEW OR MODIFIED EQUIPMENT.

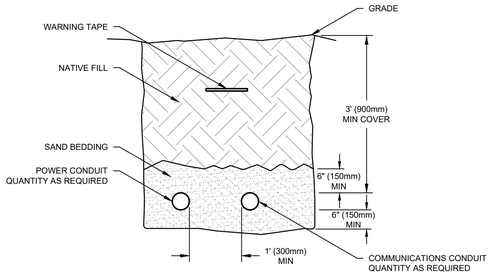

NOTE:
UNLESS OTHERWISE NOTED MAINTAIN A MINIMUM OF 300mm SPACING FROM ALL OTHER BURIED UTILITIES.

TYPICAL TRENCH DETAIL

SCALE: NTS

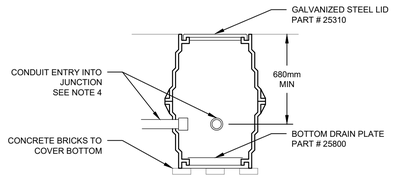

JUNCTION BOX NOTES:

1. TWO ROUND JUNCTION BOXES INSTALLED WITH ONE INVERTED UNDER THE OTHER.
2. PROVIDE BONDING FOR STEEL LID.
3. JUNCTION BOX IS TO BE WEST COAST ENGINEERING 25010 OR APPROVED EQUAL.
4. CONDUIT IS TO BE RUN AT A DEPTH OF 900mm AND HAVE A GENTLE RISE UP FOR ENTRY INTO JUNCTION BOX.

JUNCTION BOX DETAIL

SCALE: NTS

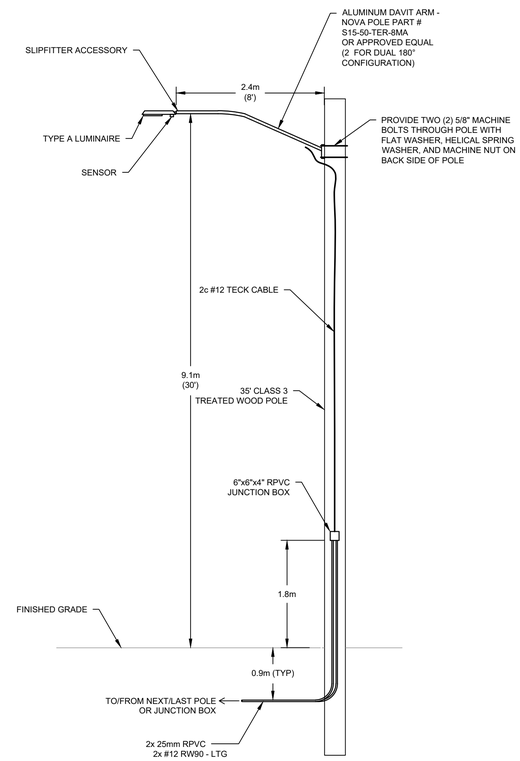

AREA LIGHT POLE ELEVATION (TYP)

SCALE 1:50

Rev	Date	Description	Drawn	Design	App'd
B	2025-06-13	ISSUED FOR DEVELOPMENT PERMIT	MA	MA	EH
A	2025-05-16	ISSUED FOR 100% DEVELOPMENT DESIGN	MA	MA	MB

THE UNIVERSITY OF BRITISH COLUMBIA

ORIGINAL DWG SIZE: ANSI D (22" x 34")

McElhanney
Suite 200
858 Beatty Street
Vancouver BC
Canada V6B 1C1
T 604 683 8521

PRELIMINARY NOT FOR CONSTRUCTION

THIS DRAWING HAS NOT BEEN APPROVED AND MAY CONTAIN ERRORS AND OMISSIONS

THE UNIVERSITY OF BRITISH COLUMBIA
6200 UNIVERSITY BLVD, VANCOUVER, BC V6T 1Z4

UBC SOUTH CAMPUS WORKS YARD
ELECTRICAL
TYPICAL DETAILS & SCHEDULES

Drawing No. E101

Project Number 2121-01293-00

Rev. B

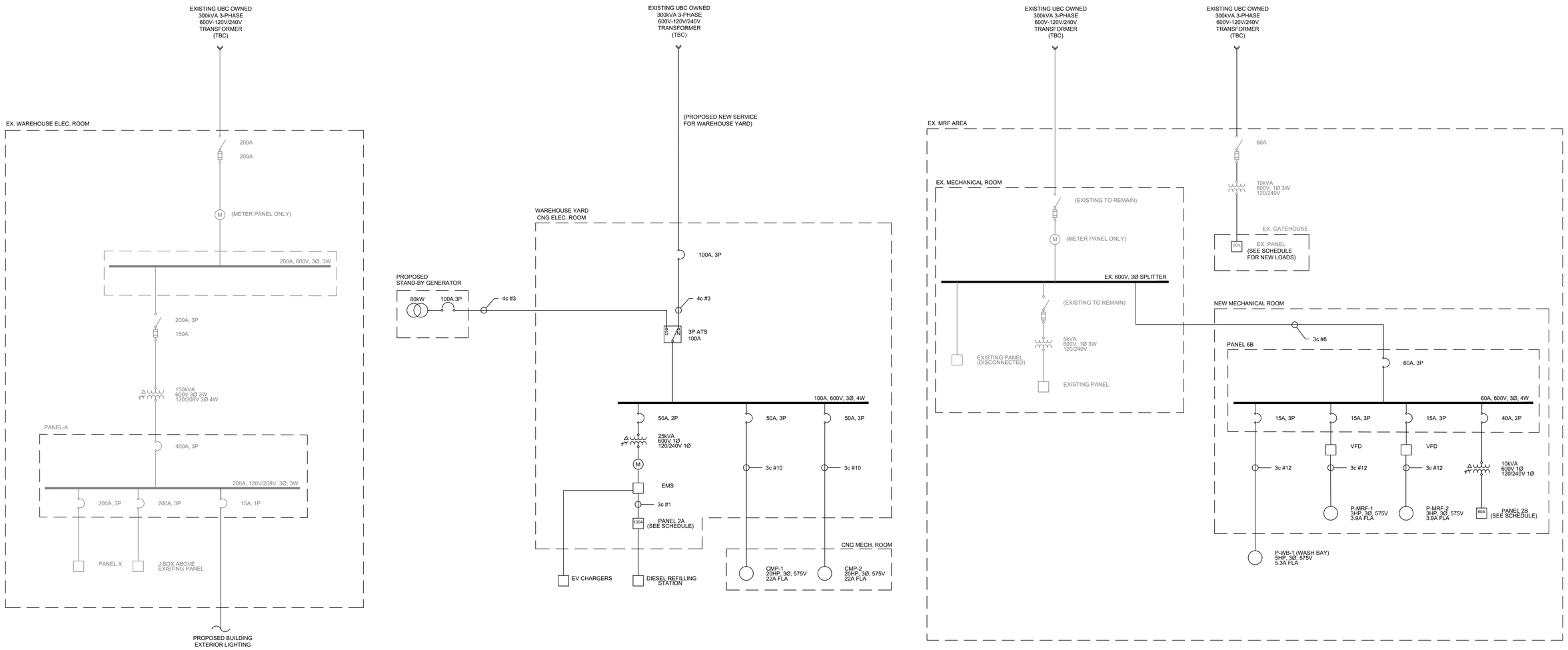

NOTES:

1. ITEMS SHOWN IN GREY ARE EXISTING EQUIPMENT, WHILE ITEMS AND EQUIPMENT SHOWN IN BLACK INDICATE NEW OR MODIFIED EQUIPMENT.

PROPOSED SINGLE LINE DIAGRAM

SCALE:NTS

Rev	Date	Description	Drawn	Design	App'd
B	2025-06-13	ISSUED FOR DEVELOPMENT PERMIT	MA	MA	EH
A	2025-05-16	ISSUED FOR 100% DEVELOPMENT DESIGN	MA	MA	MB

THE UNIVERSITY OF BRITISH COLUMBIA

ORIGINAL DWG SIZE: ANSI D (22" x 34")

McElhanney
Suite 200
858 Beatty Street
Vancouver BC
Canada V6B 1C1
T 604 683 8521

PRELIMINARY NOT FOR CONSTRUCTION

THIS DRAWING HAS NOT BEEN APPROVED AND MAY CONTAIN ERRORS AND OMISSIONS

THE UNIVERSITY OF BRITISH COLUMBIA
6200 UNIVERSITY BLVD, VANCOUVER, BC V6T 1Z4

UBC SOUTH CAMPUS WORKS YARD
ELECTRICAL
SINGLE LINE DIAGRAM

Drawing No. E102

Project Number 2121-01293-00

Rev. B

DESTROY ALL PRINTS BEARING PREVIOUS REVISION

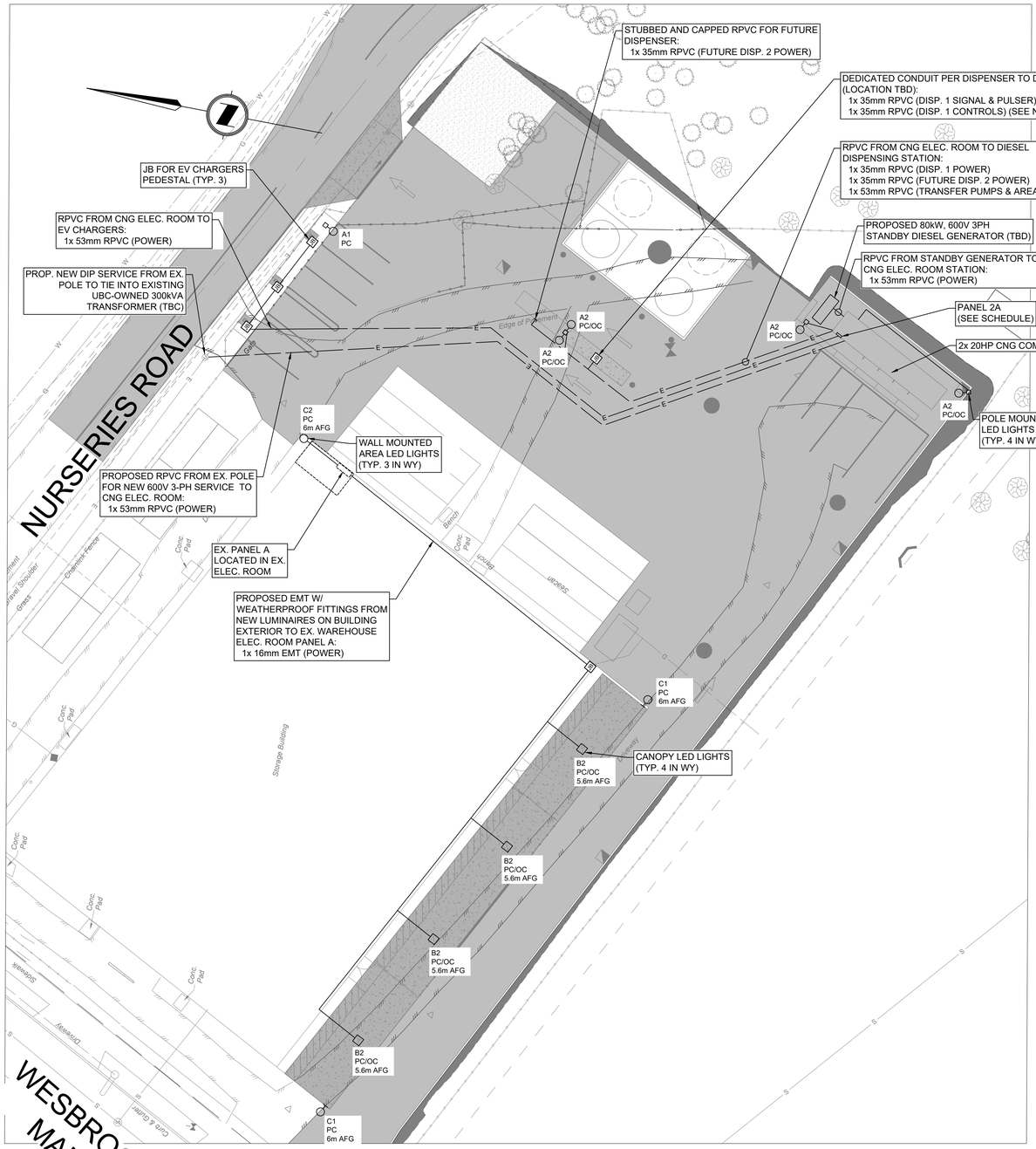

WAREHOUSE/ WORKS YARD LAYOUT

SCALE:1:250

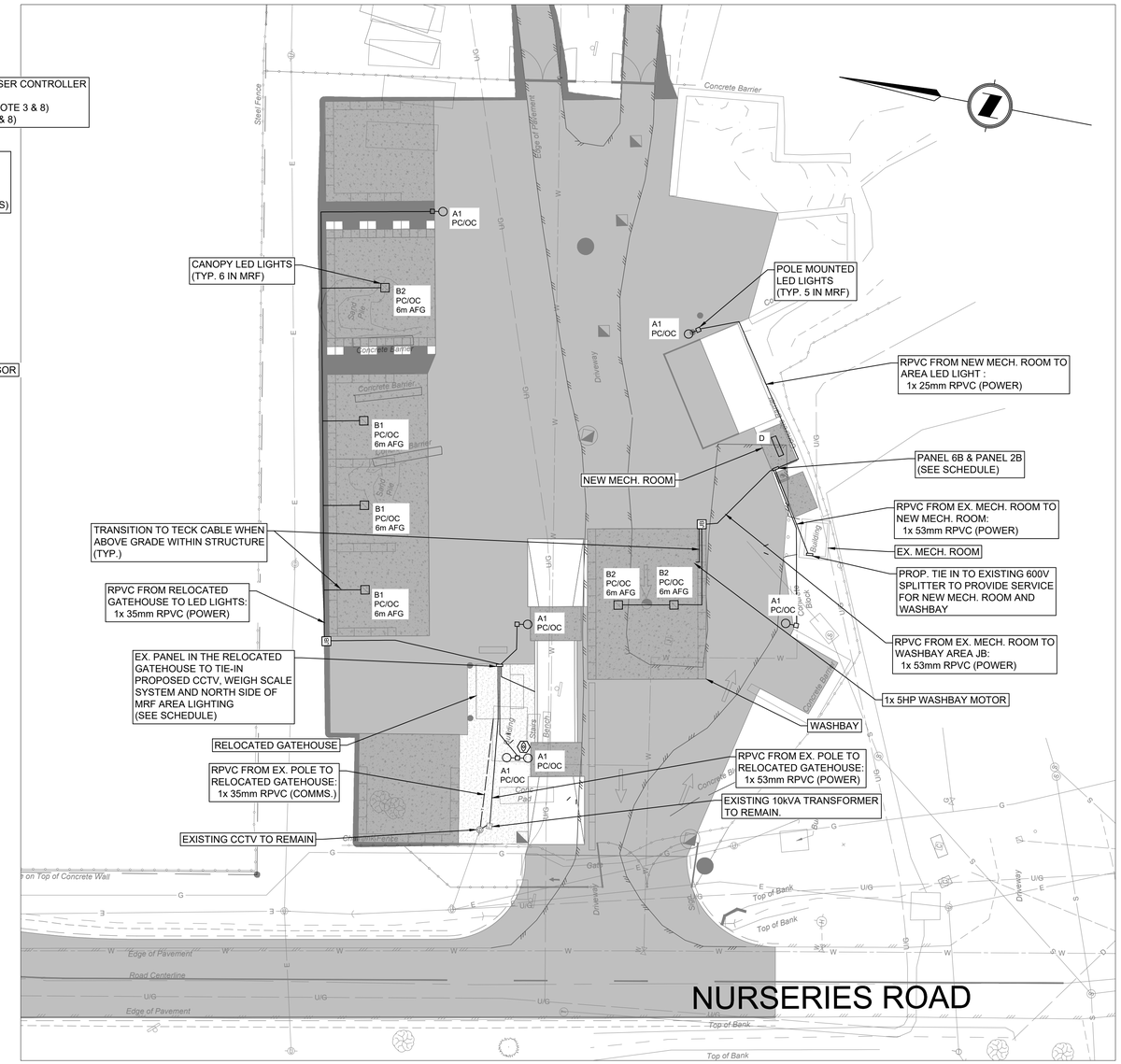

MATERIAL RECOVERY FACILITY (MRF) LAYOUT

SCALE:1:250

NOTES:

1. CONDUIT ROUTING IS SHOWN FOR INTENT ONLY. FINAL ROUTING AND PLACEMENT TO SUIT SITE CONDITIONS.
2. ALL INSTALLATION AS PER CANADIAN ELECTRICAL CODE.
3. ONE CONDUIT FOR SIGNAL & PULSER WIRES FROM PROPOSED LOCATION OF FUEL ISLAND CONTROLLER (TBD) TO EACH DISPENSER IS REQUIRED. THIS CONDUIT MUST TERMINATE IN THE PUMP POWER JUNCTION BOX.
4. ONE DEDICATED CONDUIT FOR INTRINSICALLY SAFE WIRING FROM PROPOSED LOCATION OF THE FUEL ISLAND CONTROLLER(TBD) MUST TERMINATE INSIDE EACH DISPENSER HOUSING IN A 4"X4" EXPLOSION-PROOF ENCLOSURE.
5. SEE DRAWING E101 FOR LUMINAIRE SCHEDULE.
6. CNG TRAILER INTERIOR LIGHTING TO BE PROVIDED BY OTHERS.
7. RELOCATED GATEHOUSE INTERIOR LIGHTING WILL REMAIN.
8. TRANSITION CONDUIT TO GRC PRIOR TO RISING ABOVE FOR TERMINATION. PROVIDE EYS SEAL PRIOR TO CONDUIT TERMINATION POINT.

Rev	Date	Description	Drawn	Design	App'd
B	2025-06-13	ISSUED FOR DEVELOPMENT PERMIT	MA	MA	EH
A	2025-05-16	ISSUED FOR 100% DEVELOPMENT DESIGN	MA	MA	MB

THE UNIVERSITY OF BRITISH COLUMBIA

ORIGINAL DWG SIZE: ANSI D (22" x 34")

McElhanney
Suite 200
858 Beatty Street
Vancouver BC
Canada V6B 1C1
T 604 683 8521

PRELIMINARY NOT FOR CONSTRUCTION

THIS DRAWING HAS NOT BEEN APPROVED AND MAY CONTAIN ERRORS AND OMISSIONS

THE UNIVERSITY OF BRITISH COLUMBIA
6200 UNIVERSITY BLVD, VANCOUVER, BC V6T 1Z4

UBC SOUTH CAMPUS WORKS YARD
ELECTRICAL
SITE LAYOUTS

Drawing No. E103

Project Number 2121-01293-00

Rev. B

DESTROY ALL PRINTS BEARING PREVIOUS REVISION

DATE: 2025-06-13, 16:18 FILE: \\corp\TAL-cob\2121\Projects\2121\01293\00 UBC South Campus Work Yard\07_DRAWINGS\01 Sheets\01293-E0-100-104.dwg
McElhanney ANSI D - 2021-09-14

McElhanney ANSI D - 2021-09-14

1. SCOPE OF WORK

1.1. PROVIDE ALL NECESSARY LABOUR, MATERIAL, TOOLS, TRANSPORTATION, SERVICES AND FACILITIES REQUIRED FOR THE COMPLETE ELECTRICAL INSTALLATION AS SHOWN ON THE DRAWINGS AND AS SPECIFIED.
1.2. PROVIDE ALL NECESSARY LABOUR, MATERIALS, EQUIPMENT, DEVICES AND APPARATUS NOT MENTIONED IN THE SPECIFICATIONS, OR SHOWN ON THE DRAWINGS AS REQUIRED FOR THE COMPLETE ELECTRICAL INSTALLATION.

2. CODE, RULES AND REGULATIONS

2.1. ELECTRICAL INSTALLATION SHALL BE IN ACCORDANCE WITH THE CURRENT EDITION OF THE CANADIAN ELECTRICAL CODE, NATIONAL BUILDING CODE, AND APPLICABLE MUNICIPAL AND PROVINCIAL CODES, RULES AND REGULATIONS.
2.2. PROVIDE ALL NECESSARY MATERIAL AND LABOUR REQUIRED TO MEET THE REQUIREMENTS OF THESE CODES, RULES AND REGULATIONS EVEN THOUGH THE WORK MAY NOT BE SHOWN ON THE DRAWINGS OR MENTIONED IN THE SPECIFICATIONS.

3. PERMITS AND FEES

3.1. OBTAIN ALL PERMITS AND PAY ALL FEES REQUIRED FOR THE ELECTRICAL INSTALLATION.

4. CO-OPERATION WITH OTHER TRADES

4.1. CHECK WITH OTHER TRADES TO AVOID DELAYS.

5. APPROVAL OF MATERIALS

5.1. ELECTRICAL EQUIPMENT SHALL BE NEW AND OF THE TYPE AND QUALITY SPECIFIED.

6. CERTIFICATION OF INSPECTION

6.1. OBTAIN A CERTIFICATE OF INSPECTION AND APPROVAL FROM THE ELECTRICAL INSPECTION DEPARTMENT HAVING JURISDICTION OVER THE WORK.
6.2. PROJECT HOLD POINTS FOR ENGINEER INSPECTION:
  6.2.1. PRIOR TO ENERGIZATION.
6.3. CONTRACTOR SHALL GIVE MINIMUM TEN (10) BUSINESS DAYS NOTICE TO ENGINEER FOR ALL INSPECTION HOLD POINTS LISTED ABOVE.

7. CLEAN UP

7.1. REMOVE ALL DEBRIS FROM THE SITE AS IT OCCURS, AND DO NOT ALLOW TO ACCUMULATE.
7.2. TOUCH UP WITH MATCHING PAINT ANY EQUIPMENT THAT HAS BEEN DAMAGED DURING CONSTRUCTION.

8. GUARANTEE

8.1. THE SATISFACTORY OPERATION OF ALL WORK AND APPARATUS INCLUDED AND INSTALLED UNDER THIS SECTION OF THE SPECIFICATION SHALL BE GUARANTEED FOR A PERIOD OF ONE YEAR UNLESS NOTED OTHERWISE.
8.2. REPLACE FORTHWITH, AT NO ADDITIONAL COST TO THE OWNER, ANY PART WHICH MAY PROVE TO BE DEFECTIVE WITHIN A PERIOD OF TWELVE MONTHS AFTER THE FINAL ACCEPTANCE OF THE COMPLETE BUILDING, PROVIDED THAT SUCH FAILURE IS NOT DUE TO ANY IMPROPER USAGE OR ORDINARY WEAR AND TEAR.
8.3. NO CERTIFICATE GIVEN, PAYMENT MADE, PARTIAL OR ENTIRE USE OF THE EQUIPMENT BY THE OWNER, SHALL BE CONSTRUED AS ACCEPTANCE OF DEFECTIVE WORK.

9. EARTH QUAKE RESTRAINTS

9.1. PROVIDE SEISMIC RESISTANT AND ANCHORAGE FOR ALL LIGHTING FIXTURES TO COMPLY WITH THE LOCAL BUILDING BYLAWS.
9.2. THIS CONTRACTOR SHALL ENGAGE A SEISMIC RESTRAINT CONSULTANT TO DESIGN AND REVIEW SEISMIC RESTRAINTS FOR ALL WORK ASSOCIATED WITH DIVISION 26. THE SEISMIC RESTRAINT CONSULTANT SHALL SUPERVISE THEIR INSTALLATION AND SUBMIT THE REQUISITE ASSURANCES TO THE LOCAL MUNICIPAL AUTHORITIES.
9.3. SUBMIT ASSURANCE COMMITMENT LETTER FROM THE SEISMIC RESTRAINT CONSULTANT AT THE COMMENCEMENT OF THE PROJECT AND ITS COMPLETION.

10. ARC FLASH HAZARD ASSESSMENT & LABELS

10.1. A COMPLETE ARC-FLASH HAZARD ANALYSIS REPORT IN COMPLIANCE WITH THE THE CURRENT VERSION OF CSA Z462 - WORKPLACE ELECTRICAL SAFETY; SIGNED & SEALED BY A PROFESSIONAL ENGINEER LICENSED IN THE PROVINCE OR TERRITORY OF THE PROJECT. REPORT SHALL INCLUDE:
  10.1.1. THE FLASH PROTECTION BOUNDARY AND THE INCIDENT ENERGY SHALL BE CALCULATED AT SIGNIFICANT LOCATIONS IN THE ELECTRICAL DISTRIBUTION SYSTEM (SWITCHBOARDS, MCC'S, PANELBOARDS, BUSWAY, AND SPLITTERS) WHERE WORK COULD BE PERFORMED ON ENERGIZED PARTS.
  10.1.2. UP TO DATE INFORMATION FROM THE ELECTRICAL UTILITY.
  10.1.3. COMPUTER GENERATED ONE-LINE SYSTEM DIAGRAM THAT CLEARLY IDENTIFIES INDIVIDUAL EQUIPMENT BUSES, BUS NUMBERS USED IN SHORT-CIRCUIT ANALYSIS, CABLE AND BUS CONNECTIONS BETWEEN EQUIPMENT, CALCULATED MAXIMUM SHORT-CIRCUIT CURRENT AT EACH BUS LOCATION, DEVICE NUMBERS USED IN THE TIME-CURRENT COORDINATION ANALYSIS, AND OTHER INFORMATION PERTINENT TO THE COMPUTER ANALYSIS.
  10.1.4. LABELING SECTION SHOWING TYPES OF LABELS TO BE PROVIDED WITH TYPICAL LABEL IMAGES.
  10.1.5. CALCULATION METHODS AND ASSUMPTIONS. PREFERRED CALCULATION METHOD IS IEEE 1584-2018.
10.2. ARC-FLASH HAZARD ANALYSIS MAY OMIT:
  10.2.1. CIRCUITS 240V OR LESS WHERE BOLTED SHORT CIRCUIT CURRENT IS LESS THAN 10kA.
  10.2.2. CIRCUITS 240V OR LESS FED BY TRANSFORMERS 112.5kVA OR LESS.
10.3. LABELS SHALL BE 100mm x 100mm ADHESIVE LABELS. LABELS SHALL INCLUDE THE FOLLOWING INFORMATION:
  10.3.1. SYSTEM VOLTAGE.
  10.3.2. FLASH PROTECTION BOUNDARY.
  10.3.3. PERSONAL PROTECTIVE EQUIPMENT CATEGORY.
  10.3.4. ARC FLASH INCIDENT ENERGY VALUE (CAL/CM2).
  10.3.5. LIMITED, RESTRICTED, AND PROHIBITED APPROACH BOUNDARIES.
  10.3.6. STUDY REPORT NUMBER AND ISSUE DATE.
10.4. LABELS SHALL BE APPLIED TO ALL EQUIPMENT AS IDENTIFIED IN THE STUDY.

11. CONDUIT AND RACEWAY

11.1. RIGID STEEL CONDUIT: FOR ALL EXPOSED AND UNDERGROUND CONDUIT EXPOSED TO MECHANICAL DAMAGE. (MINIMUM SIZE: 3/4" (19mm))
11.2. ELECTRICAL METALLIC TUBING (EMT): INTERIOR POWER AND LIGHTING BRANCH CIRCUITS WHERE RUN CONCEALED ABOVE SUSPENDED CEILING, IN STUD WALLS, FURRED SPACES, AND WHERE NOT EXPOSED TO MECHANICAL DAMAGE, OR ABOVE 6' (1830mm) FROM FLOOR. (MINIMUM SIZE: 3/4" (19mm))
11.3. ELECTRICAL NON-METALLIC TUBING (ENT): INTERIOR BRANCH CIRCUITS & COMMUNICATIONS CABLING WHERE ENCLOSED IN CONCRETE SLAB. ENT MUST BE SMOOTH INTERIOR WALL TYPE. SUBMIT SHOP DRAWING FOR APPROVAL PRIOR TO USE. (MINIMUM SIZE: 3/4" (19mm))
11.4. FLEXIBLE METALLIC CONDUIT: IN DRY LOCATIONS, CONNECTION TO TRANSFORMERS, (6' (1830mm) MAX.), VIBRATING EQUIPMENT (24" (610mm) MAX) AND TO RECESSED LIGHTING FIXTURES.
11.5. LIQUID-TIGHT FLEXIBLE METALLIC CONDUIT: IN DAMP AND WET LOCATIONS FOR CONNECTION TO ALL PUMP MOTORS, SOLENOID VALVES, HVAC EQUIPMENT AND SIMILAR DEVICES SHALL BE MADE USING LIQUID TIGHT FLEXIBLE METALLIC CONDUIT. PROVIDE SEPARATE GROUND WIRE INDEPENDENT OF CONDUIT, RUN INSIDE CONDUIT AND BONDED AT BOTH ENDS TO ENCLOSURES. MAXIMUM LENGTH OF 24" (610mm).
11.6. CONDUIT IN DIRECT CONTACT WITH EARTH TO BE RIGID PVC TYPE.
11.7. CONDUITS SHALL BE TIGHTLY COVERED AND WELL PROTECTED DURING CONSTRUCTION USING METALLIC BUSHINGS AND BUSHING "PENNIES" TO SEAL OPEN END.
11.8. IN ALL EMPTY CONDUITS OR DUCTS, INSTALL A 200 lb (90 kg) TENSILE STRENGTH POLYETHYLENE PULLING ROPE.
11.9. CONDUIT SYSTEMS SHALL BE ELECTRICALLY CONTINUOUS THROUGHOUT. INSTALL CODE SIZED, INSULATED, COPPER, GREEN GROUNDING CONDUCTOR IN ALL CONDUIT RUNS PULLED WITH PHASE AND/OR NEUTRAL CONDUCTORS.
11.10. EXPOSED CONDUIT SHALL BE RUN PARALLEL OR AT RIGHT ANGLES TO THE CENTERLINES OF COLUMNS AND BEAMS.
11.11. ALL RACEWAY SYSTEMS SHALL BE SECURED TO THE BUILDING STRUCTURES USING SPECIFIED FASTENERS, CLAMPS AND HANGERS SPACED ACCORDING TO CODE REQUIREMENTS.
11.12. SUPPORT SINGLE RUNS OF CONDUIT USING ONE HOLE PIPE STRAPS.
11.13. MULTIPLE CONDUIT RUNS SHALL BE SUPPORTED USING "TRAPEZE" HANGERS, FABRICATED FROM SPECIFIED CONSTRUCTION CHANNEL, MOUNTED TO 3/8" (9.5mm) DIAMETER, THREADED STEEL RODS SECURED TO BUILDING STRUCTURES. FASTEN CONDUIT TO CONSTRUCTING CHANNEL WITH STANDARD ONE HOLE PIPE CLAMPS OR THE EQUIVALENT.
11.14. RACEWAYS SHALL BE JOINED USING SPECIFIED COUPLING OR TRANSITION COUPLINGS WHERE DISSIMILAR RACEWAY SYSTEMS ARE JOINED.
11.15. CONDUITS SHALL BE SECURELY FASTENED TO CABINETS, BOXES, AND GUTTERS USING TWO LOCKNUTS AND AN INSULATING BUSHING OR SPECIFIED INSULATING CONNECTORS. INSTALL GROUNDING BUSHINGS OR BONDING JUMPERS ON ALL CONDUITS TERMINATING AT CONCENTRIC KNOCKOUTS.
11.16. CONDUIT TERMINATIONS EXPOSED AT WEATHERPROOF ENCLOSURES AND CAST OUTLET BOXES SHALL BE MADE WATERTIGHT USING SPECIFIED CONNECTORS AND HUBS.
11.17. INSTALL EXPANSION COUPLINGS WHERE ANY CONDUIT CROSSES A BUILDING SEPARATION OR EXPANSION JOINT.
11.18. ALL FLOOR PENETRATIONS SHALL BE SEALED WATER-TIGHT. MAINTAIN FIRE RATING AS REQUIRED.
11.19. FIRE-SAFE ALL RATED WALL PENETRATIONS USING 3M LISTED FIRE-SAFING SEALANTS AND ASSEMBLIES.

12. BOXES AND WIRING SERVICES

12.1. EXPOSED OUTLET BOXES AND BOXES IN DAMP AND WET LOCATIONS SHALL BE CAST METAL WITH GASKETED CAST METAL COVER PLATES.
12.2. OUTLET BOXES SHALL BE INSTALLED AT THE LOCATIONS AND ELEVATIONS SHOWN ON THE DRAWINGS OR SPECIFIED HEREIN. MAKE ADJUSTMENTS TO LOCATIONS AS REQUIRED BY STRUCTURAL CONDITIONS AND TO SUIT COORDINATION REQUIREMENTS OF OTHER TRADES.
12.3. MOUNTING HEIGHTS: MOUNTING HEIGHTS FROM FINISHED FLOOR TO CENTER LINE OF DEVICE BOX SHALL BE AS FOLLOWS, AND IN ACCORDANCE WITH HANDICAPPED ACCESSIBILITY REQUIREMENTS OF GOVERNING CODE.
  12.3.1. CONVENIENCE RECEPTACLE - 18" (4550MMmm)
  12.3.2. LIGHT SWITCHES - 458" (1220150mm)
  12.3.3. EMERGENCY LIGHT HEADS - 90" (2300mm)
  12.3.4. LINE VOLTAGE THERMOSTATS - 60" (1520mm

13. CABLE AND WIRE

13.1. COMPLETE INSULATION TESTING WITH 1KV MEGGER ON ALL CABLES AND WIRING WITH A RATED AMAPACITY EXCEEDING 100 A. ALL CABLES WITH FAILED INSULATION TESTS TO BE REPLACED AT NO COST. SUBMIT INSULATION TEST REPORTS TO ENGINEER FOR REVIEW.
  13.1.1. MEGGER TESTING SHALL BE COMPLETED BETWEEN EACH CONDUCTOR AND FROM CONDUCTOR TO GROUND.
  13.1.2. EACH TEST SHALL BE PERFORMED FOR MIN. 15 SECONDS.
  13.1.3. INSULATION RESISTANCE SHALL BE >100 MΩ, AND NOT BE MORE THAN 20% DIFFERENT BETWEEN THE LOWEST AND HIGHEST CONDUCTOR IN A CABLE.
13.2. CONDUCTORS SHALL NOT BE INSTALLED IN CONDUIT UNTIL ALL WORK OF ANY NATURE THAT MAY CAUSE DAMAGE IS COMPLETED. CARE SHALL BE TAKEN IN PULLING CONDUCTORS THAT INSULATION IS NOT DAMAGED. U.L. AND C.S.A. APPROVED NON-PETROLEUM BASE AND INSULATING TYPE PULLING COMPOUND SHALL BE USED AS NEEDED.
13.3. ALL CABLES SHALL BE INSTALLED AND TESTED IN ACCORDANCE WITH MANUFACTURERS REQUIREMENTS AND WARRANTY.
13.4. ALL ASPECTS OF SPLICING AND TERMINATING SHALL BE IN ACCORDANCE WITH CABLE MANUFACTURERS PUBLISHED PROCEDURES.
13.5. MAKE UP ALL SPLICES IN OUTLET BOXES WITH CONNECTORS AS SPECIFIED HEREIN WITH SEPARATE TAILS OF CORRECT COLOR TO BE MADE UP TO SPLICE. PROVIDE AT LEAST 6" (150mm) OF TAILS PACKED IN BOX AFTER SPLICE IS MADE UP.
13.6. ALL WIRE AND CABLE IN PANELS, TERMINAL CABINETS AND EQUIPMENT ENCLOSURES SHALL BE BUNDLED AND CLAMPED.
13.7. ALL FEEDERS LESS THAN 60A SHALL BE COPPER. FEEDERS LARGER THAN 60A MAY UTILIZE ALUMINIUM CONDUCTORS WITH ENGINEER APPROVAL.
13.8. MINIMUM WIRE SIZE SHALL BE:
  13.8.1. POWER WIRING - NO. 12 AWG R(W)90 COPPER.
  13.8.2. DIGITAL CONTROL WIRING - NO. 16 AWG R(W)90 COPPER.
  13.8.3. ANALOG CONTROL WIRING - NO. 18 AWG TWISTED SHIELDED PAIR.

14. WIRING DEVICES

14.1. SWITCHES
  14.1.1. SPECIFICATION GRADE, WHITE, DECORATOR STYLE AVAILABLE FOR BACK AND SIDE WIRING. 20A, 120V OR 347V, SINGLE POLE, DOUBLE POLE, THREE-WAY OR FOUR-WAY AS INDICATED.
14.2. RECEPTACLES
  14.2.1. SPECIFICATION GRADE, WHITE, DECORATOR STYLE, SIDE WIRE ONLY DUPLEX RECEPTACLE CSA TYPE 5-15R, 125V, 15A U-GROUNDED.
  14.2.2. GROUND FAULT INTERRUPTER TYPE TO BE INDICATING, SPECIFICATION GRADE, IMPACT RESISTANT, U GROUND, COMPLETE WITH BREAKER AND RESET BUTTON.
  14.2.3. INSTALL ALL RECEPTACLES IN THE VERTICAL PLANE UNLESS OTHERWISE NOTED.
  14.2.4. ALL RECEPTACLES TO BE INSTALLED USING SIDE WIRING TERMINALS ONLY. BACK WIRING WILL NOT BE ACCEPTED.
14.3. COVER PLATES
  14.3.1. STAINLESS STEEL, 1mm THICK BRUSHED COVER PLATES.
  14.3.2. WEATHERPROOF, DURABLE, 'IN-USE' RATED COVER PLATES COMPLETE WITH GASKETS FOR WP DUPLEX RECEPTACLES AS INDICATED.
  14.3.3. INSTALL SINGLE THROW SWITCHES WITH HANDLE IN "UP" POSITION WHEN SWITCH CLOSED.
  14.3.4. INSTALL RECEPTACLES/SWITCHES VERTICALLY IN GANG TYPE OUTLET BOX WHEN MORE THAN ONE RECEPTACLE IS REQUIRED IN ONE LOCATION.

15. PANEL BOARDS

15.1. SUBMIT SHOP DRAWINGS PRIOR TO ORDERING.
15.2. RATINGS: REFER TO PANEL SCHEDULES SHOWN ON DRAWING.
15.3. BACKFEED BREAKERS SHALL NOT BE UTILIZED IN PLACE OF A MAIN BREAKER.
15.4. FINISH: ALL PAINTED STEEL WORK SHALL BE TREATED WITH A PRIMER COAT AND FINISH COAT OF THE MANUFACTURER'S STANDARD GRAY COLOR OR ANSI 61.
15.5. PANEL BOARDS TO HAVE FLUSH DOORS WITH TWO KEYS FOR EACH PANEL BOARD (ALL KEYS TO BE ALIKE).
15.6. BUSSING
  15.6.1. BUSSING SHALL BE RECTANGULAR CROSS SECTION FULL LENGTH TIN PLATED ALUMINUM.
  15.6.2. EACH PANEL BOARD SHALL BE EQUIPPED WITH A GROUND BUS SECURED TO THE INTERIOR OF THE ENCLOSURE. THE BUS SHALL BE EQUAL TO THE PANEL BOARD NEUTRAL BUS AND SHALL HAVE A SEPARATE LUG FOR EACH GROUND CONDUCTOR. NOT MORE THAN ONE CONDUCTOR SHALL BE INSTALLED PER LUG.
  15.6.3. PANEL BOARD DIRECTORIES: SHALL BE TYPEWRITTEN, ARRANGE IN NUMERICAL ORDER AND SHALL SHOW THE NUMBER OF THE CIRCUIT IS INDICATED. MOUNT TWO COPIES OF DIRECTORIES INSIDE EACH PANEL BOARD.
  15.6.4. ACCEPTABLE MANUFACTURERS: SIEMENS, EATONCUTLER HAMMER, SCHNEIDER CANADA.

16. PROTECTIVE DEVICES

16.1. CIRCUIT BREAKERS: MOLDED CASE, BOLT-ON, THERMAL MAGNETIC TYPE, 40 DEGREES C. AMBIENT TEMPERATURE COMPENSATED, FIXED MOUNTING, WITH QUICK-MAKE AND QUICK-BREAK SWITCHING MECHANISM MECHANICALLY TRIP-FREE FROM THE OPERATING HANDLE.
16.2. RATINGS: REFER TO DRAWINGS AND PANEL SCHEDULES FOR TRIP FRAME AND POLES REQUIRED. MINIMUM SHORT CIRCUIT RATING FOR 120/240 VOLT BREAKERS IS 10,000 A, IF NOT INDICATED OTHERWISE.
16.3. MANUAL MOTOR STARTERS: FRACTIONAL H.P. 1 PHASE MOTORS SHALL BE PROTECTED BY THERMAL O.L. RELAY INTEGRAL WITH THE DISCONNECT.
16.4. PROVIDE GROUND FAULT CIRCUIT INTERRUPTION (GFCI) RATED CIRCUIT BREAKERS AS INDICATED IN DESIGN. GFCI BREAKERS TO BE RATED FOR PERSONNEL PROTECTION, CLASS A - CSA C22.2 #144, UNLESS OTHERWISE NOTED. GFCI BREAKERS TO HAVE AUTOMATIC SELF TESTING FUNCTIONALITY.
16.5. PROVIDE ARC FAULT CIRCUIT INTERRUPTION (AFCI) RATED CIRCUIT BREAKERS AS INDICATED IN DESIGN. AFCI BREAKERS ARE TO EMPLOY COMBINATION TYPE SENSING UNLESS OTHERWISE NOTED.

17. SURGE PROTECTION DEVICES (SPD)

17.1. SUBMIT SHOP DRAWINGS PRIOR TO ORDERING.
17.2. SPD SHALL PROVIDE ALL MODE (L-N, L-L, L-G, & N-G) PROTECTION, WITH STATUS INDICATOR LIGHTS FOR EACH PHASE (3x MIN).
17.3. SPD SHALL COME WITH MANUFACTURER 30 YEAR UNLIMITED FREE REPLACEMENT WARRANTY.
17.4. SPD SHALL BE FED FROM A DEDICATED OVERCURRENT DEVICE TO ALLOW FOR SERVICE AND REPLACEMENT WITHOUT INTERUPTING OVERALL BUILDING ELECTRICAL SERVICE.
17.5. SPD SHALL BE LOCATED AS CLOSE AS PRACTICAL TO THE UPSTREAM OVERCURRENT PROTECTION WITH THE FOLLOWING CONSIDERATIONS:
  17.5.1. SHORTEST POSSIBLE CONDUCTOR RUNS.
  17.5.2. MINIMUM BENDS IN CONDUCTORS. SHARP BENDS ARE NOT PERMITTED.
  17.5.3. IF CONDUCTOR LENGTHS MUST EXCEED 12” (300mm), WIRING IS TO BE BRAIDED OR TWISTED AT A RATE OF 1x BRAID/TWIST PER 12” (300mm).
17.6. UPSTREAM OVERCURRENT PROTECTION SHALL BE SIZED AS PER MANUFACTURER RECOMMENDATIONS.
17.7. SPD FEEDER CONDUCTORS SHALL BE SIZED AS PER MANUFACTURER RECOMMENDATIONS.
17.8. SPD ALARM CONTACT SHALL BE MONITORED BY PLC. PROVIDE ALL REQUIRED WIRING AS REQUIRED FOR SPD MONITORING.
17.9. SPD SHALL BE LISTED WITH CERTIFICATION AGENCY ACCEPTABLE IN THE PROVINCE OF INSTALLATION, AND BE IN ACCORDANCE WITH THE LATEST EDITION OF ANSI/UL 1449.

18. PLYWOOD BACKBOARDS

18.1. WHERE INDICATED FOR TELEPHONE OR COMMUNICATION SYSTEM TERMINALS, OR FOR MOTOR CONTROL OR OTHER EQUIPMENT ASSEMBLES, PROVIDE BACKBOARDS OF SIZE INDICATED.
18.2. USE DOUGLAS FIR PLYWOOD, EXTERIOR GRADE WITH "B" FACE, PRIME AND FINISHED PAINTED. PLYWOOD SHALL BE FIRE RESISTANT (3/4" (75mm) THICK).

19. GROUNDING

19.1. ENCLOSURES OF EQUIPMENT, RACEWAYS, AND FIXTURES SHALL BE PERMANENTLY AND EFFECTIVELY GROUNDED. PROVIDE CODE-SIZED (UNLESS OTHERWISE INDICATED) COPPER, INSULATED GREEN EQUIPMENT GROUND WITH ALL BRANCH AND FEEDER CIRCUIT RUNS. EQUIPMENT GROUND SHALL ORIGINATE AT PANEL BOARD GROUND BUS AND SHALL BE BONDED TO ALL SWITCH AND RECEPTACLE BOXES AND ELECTRICAL EQUIPMENT ENCLOSURES.
19.2. BUILDING SERVICES SHALL BE GROUNDED TO BUILDING STEEL, TO COLD METALLIC WATER PIPING, AND GROUND RODS (3/4" (75mm) X 10' (3050mm) COPPER).
  19.2.1. CONNECT ALL BUILDING SERVICES TO GROUND BUS INCLUDING, BUT NOT LIMITED TO:
19.2.1.1. METALLIC PROCESS WATER PIPING AND ALL METALLIC SECTIONS OF PIPING ISOLATED BY NON-METALLIC PIPING & FITTINGS.
19.2.1.2. BUILDING PIPING
19.2.1.3. GAS PIPING
19.2.1.4. BUILDING STRUCTURAL STEEL
19.2.1.5. COMMUNICATION BUSBOARD
19.2.1.6. GROUND GRID
  19.2.2. ALL CONNECTIONS TO GROUND BUS TO USE #6 RW90 COPPER GREEN INSULATED WIRING UNLESS OTHERWISE NOTED.
  19.2.3. ALL CONNECTIONS TO GROUND BUS TO BE LABELLED ACCORDING TO PURPOSE.
19.3. ALL CONNECTIONS TO BE PERMANENTLY CRIMPED.
19.4. ISOLATED GROUND CONDUCTORS SHALL TERMINATE ON ISOLATED GROUND BUS AND RECEPTACLE ISOLATED GROUND LUGS ONLY.

20. TRANSFORMERS

20.1. TRANSFORMERS SHALL BE INDOOR TYPE, SELF COOLED SINGLE OR THREE-PHASE DUAL WINDING, FULLY ENCLOSED, VENTILATED, GENERAL PURPOSE DRY TYPE, 600 VOLT PRIMARY 120/208 VOLT SECONDARY, 60 HERTZ, EQUIPPED WITH FOUR 2.5% VOLTAGE TAPS ABOVE AND BELOW RATED VOLTAGE AND SHALL BE OF THE KVA RATING SHOWN ON THE DRAWINGS.
20.2. TRANSFORMERS SHALL HAVE COPPER OR ALUMINUM WINDINGS CLASS `H' INSULATION GROUP, WITH TEMPERATURE RISE, WHEN OPERATED CONTINUOUSLY AT FULL LOAD AND RATED FREQUENCY, NOT EXCEEDING 150 DEGREE C. RISE OVER 40 DEGREE C. AMBIENT, UNLESS MENTIONED OTHERWISE ON THE ONE-LINE DIAGRAM.
20.3. TRANSFORMERS SHALL HAVE A MINIMUM OF 10% OVERLOAD CAPACITY AT RATED VOLTAGE AND SHALL HAVE A 10 KV BILL RATING.
20.4. SOUND LEVEL AT ANY LOAD SHALL NOT EXCEED 45DB WHEN TESTED IN A ROOM WITH AMBIENT SOUND LEVEL NOT EXCEEDING 24 DB. EXCESSIVELY NOISY TRANSFORMERS SHALL BE REPLACED.
20.5. TRANSFORMER IMPEDANCE SHALL NOT BE LESS THAN 4.0% NOR GREATER THAN 6.5%. TRANSFORMER SHALL CONFORM TO NEMA TRI-1974, CEC 450-21 AND ALL APPLICABLE PROVINCIAL AND LOCAL CODES.
20.6. TRANSFORMER SHALL NOT CONTAIN ANY PCB'S (POLYCHLORINATED BIPHENYLS).
20.7. TRANSFORMER SIZE SHALL FIT SPACE ALLOCATED PER DRAWINGS.
20.8. TRANSFORMER SHALL BE FLOOR/WALL MOUNTED AS SHOWN ON THE DRAWINGS AND AS DIRECTED BY THE ENGINEER. FURNISH AND INSTALL ALL MOUNTING HARDWARE TO SAFELY CARRY THE WEIGHT OF THE TRANSFORMER. MAINTAIN ADEQUATE SPACING FOR VENTILATION AS RECOMMENDED BY THE MANUFACTURER AND REQUIRED BY CODE.
20.9. PROVIDE NEOPRENE TYPE VIBRATION INSULATION PADS FOR EACH TRANSFORMER. VIBRATION AND SEISMIC CONTROL SHALL MEET NBC AND SUPPLEMENTS REQUIREMENT.
20.10. CONNECTIONS TO TRANSFORMERS SHALL BE MADE WITH FLEXIBLE METALLIC CONDUIT. INSTALL GROUND CONDUCTORS IN EACH CONDUIT AND PROVIDE GROUNDING BUSHINGS AS REQUIRED.
20.11. PROVIDE "WONDER BOARD" HEAT INSULATING BARRIER AROUND TRANSFORMER WHERE INSTALLED ON COMBUSTIBLE SURFACE.
20.12. ACCEPTABLE MANUFACTURERS: SIEMENS, SCHNEIDER, POLYGON, CUTLER HAMMER, MARCUS, DELTA, HAMMOND, AND REX.

21. LIGHTING FIXTURES

21.1. SUBMIT SHOP DRAWINGS PRIOR TO ORDERING.
21.2. ALL FIXTURES SHALL BE DLC APPROVED AND AS PER LUMINAIRE SCHEDULE.
21.3. LED SCREW-IN LAMPS:
  21.3.1. LED SCREW IN LAMPS SHALL BE 4000 DEGREE K UNLESS SPECIFIED OTHERWISE.
  21.3.2. LUMEN OUTPUTS SHALL BE AS PER LUMINAIRE SCHEDULES. MINIMUM LUMENS PER WATT FOR ALL LED SCREW-IN LAMPS SHALL BE MINIMUM 70 LPW.
  21.3.3. SUBMIT SHOP DRAWINGS PRIOR TO ORDERING.
21.4. FLUORESCENT LAMPS:
  21.4.1. ALL FLUORESCENT LAMPS SHALL BE 32W, 2950 LUMEN, T-8 ENERGY SAVING, 4000 DEGREE K (CRI-85), LONG LIFE (36,000 HR) UNLESS SPECIFIED OTHERWISE
  21.4.2. LAMPS SHALL BE AS MANUFACTURED BY G.E, OSRAM, VENTURE, SYLVANIA.
21.5. FLUORESCENT LAMP BALLASTS:
  21.5.1. BALLAST'S FOR ALL TUBE FLUORESCENT LAMPS SHALL BE U.L. APPROVED, CBM CERTIFIED OR ETL TESTED, CLASS P, SOUND RATED A, ENERGY-SAVING, ELECTRONIC PROGRAM START.
  21.5.2. BALLASTS SHALL BE APPROVED FOR USE WITH ENERGY SAVING LAMPS BY THE LAMP MANUFACTURER.
21.6. LED FIXTURES:
  21.6.1. LED FIXTURES SHALL BE 4000 DEGREE K UNLESS SPECIFIED OTHERWISE.
  21.6.2. LUMEN OUTPUTS SHALL BE AS PER LUMINAIRE SCHEDULES. MINIMUM LUMENS PER WATT FOR ALL LED FIXTURES SHALL BE MINIMUM 90 LPW.
  21.6.3. LED FIXTURE ARE TO HAVE A LP70 OF 50,000 HOURS OR GREATER.
21.7. FIXTURE INSTALLATION
  21.7.1. CONTRACTOR SHALL BE RESPONSIBLE FOR HANDLING AND STORAGE. FIXTURES SHALL BE INSTALLED PLUMB, LEVEL, IN STRAIGHT LINES WITHOUT DISTORTION AND CLEAN.
  21.7.2. INSTALL EACH FIXTURE IN A MANNER RECOMMENDED BY THE FIXTURE MANUFACTURER AND APPROVED BY THE OWNER'S REPRESENTATIVE. UNDER THIS SECTION OF THE WORK, FURNISH AND INSTALL ALL ADDITIONAL CEILING BRACING, HANGER SUPPORTS AND OTHER STRUCTURAL REINFORCEMENTS TO THE BUILDING REQUIRED TO PROPERLY AND SAFELY SUSPEND FIXTURES, ALL AS APPROVED BY THE ENGINEER.
  21.7.3. PROVIDE SEISMIC WIRE SUPPORTS FOR EACH SUSPENDED FIXTURE, SECURED TO THE BUILDING STRUCTURE INDEPENDENT OF THE CEILING SUPPORTING SYSTEM.

22. LINE VOLTAGE LIGHTING CONTROLS

22.1. LIGHTING CONTROLS SHALL PROVIDE CONTROL AND OPERATION OF LIGHTING AS NOTED.
22.2. LIGHTING CONTROLS ARE PERMITTED TO BE LINE VOLTAGE THROUGHOUT.
22.3. RELAYS & CONTACTORS SHALL BE 20A 120V RATED.
22.4. SWITCHES
  22.4.1. SWITCHES SHALL BE DECORATOR STYLE TOGGLE.

23. IDENTIFICATION

23.1. IDENTIFY ALL PLACES OF ELECTRICAL EQUIPMENT (INCLUDING EACH AND EVERY RECEPTACLE), OTHER THAN CONDUITS AND CONDUCTORS, WITH ENGRAVED LAMINATED PLASTIC NAMEPLATES OR BROTHER P-TOUCH LABELS HAVING 1/8" (3mm) MINIMUM HEIGHT. ATTACH ALL LAMACOID LABELS, UNLESS OTHERWISE DIRECTED WITH SILICONE CEMENT.
23.2. COLOURS OF LABELS TO BE AS FOLLOWS:

23.2.1.	NORMAL POWER -	BLACK LETTERING ON WHITE BACKGROUND
23.2.2.	STANDBY POWER -	RED LETTERING ON WHITE BACKGROUND
23.2.3.	EMERGENCY POWER -	WHITE LETTERING ON RED BACKGROUND
23.2.4.	LOW VOLTAGE -	BLUE LETTERING ON WHITE BACKGROUND

23.3. FOR LIGHTING AND POWER SHOW THE COMPLETE CIRCUIT NUMBER OF ALL ENCLOSED CIRCUITS.

24. COMMUNICATION CABLING

24.1. DATA CABLING:
  24.1.1. INSTALL FOUR TWISTED PAIR, 24 GAUGE, SOLID COPPER WIRE, CATEGORY 6 INSULATED & UNSHIELDED BETWEEN DEVICES AS INDICATED ON THE NETWORK DIAGRAM E1102 AND AWC DRAWING 45393-IC-NET-001.
  24.1.2. CABLE IS TO BE BLUE JACKETED.
  24.1.3. DATA CABLES ARE TO BE TERMINATED AS SPECIFIED IN THE ANSIEIA/TIA-606-B STANDARDS, PIN CONFIGURATION T568B606B ON CATEGORY 6.
  24.1.4. ALL DATA CABLES ARE TO BE TESTED FOR CONTINUITY, CROSSTALK AND ATTENUATION AND BE WITHIN LIMITS SPECIFIED IN ANSI/TIA-568-C.2EIA/TIA BULLETIN TSB67. SUBMIT TEST RESULTS TO ENGINEER FOR REVIEW.
24.2. FIBER CABLING:
  24.2.1. FIBER CABLING TO BE SIX STRAND, SINGLE-MODE, 250 MICRON, OS2 AND TERMINATED USING SC BREAKOUT KIT.
  24.2.2. PROVIDE 1m SERVICE LOOP AT ALL FIBER TERMINATION POINTS TO ALLOW FOR OWNER RE-CONFIGURATION.
  24.2.3. MANAGED SWITCHES TO BE RUGGEDCOM RSG910C INDUSTRIAL HARDENED FULLY MANAGED ETHERNET SWITCHES INCLUDING:
24.2.3.1. RUGGEDCOM SFP ACCESSORY 1 X 1000MBIT/S, 1000BASE-LX, LC-INTERFACE, OPTICAL: SINGLE MODE, -40 TO +85°C.
  24.2.4. PROVIDE FIBER PATCH CORDS FOR ALL CONNECTED EQUIPMENT AND MULTI-PURPOSE CASSETTES WITH LC ADAPTERS .
  24.2.5. FIBER CABLING TO BE RUN IN DEDICATED RACEWAYS.
  24.2.6. CONTACT ZAC BULLER AT 403-322-9676 OR zacb@impacttechnicalproducts.com

24.3. COMMUNICATION CABLES INSTALLED IN UNDERGROUND CONDUITS SHALL BE OUTDOOR RATED FOR WET LOCATIONS.
24.4. HORIZONTAL RUNS OF COMMUNICATION CABLE ARE TO BE SUPPORTED USING J-HOOKS CONNECTED TO THE BUILDING STRUCTURE OR T-BAR CEILING SYSTEM. CADDY CABLE-CAT OR APPROVED EQUAL.
24.5. PROVIDE LABELING OF OUTLETS, CABLING AND PATCH PANELS.
24.6. PROVIDE 40" (1000mm) SPARE CABLE AT DEVICES.
24.7. PROVIDE GROUND BAR AT COMMUNICATION BACKBOARDS WITH #6 AWG, RW90, GREEN JACKETED GROUND CONDUCTOR TO BUILDING GROUND POINT.

25. RECORD DRAWING

25.1. ELECTRICAL CONTRACTOR TO PROVIDE AS-BUILT MARKUPS TO ENGINEER FOR RECORD DRAWINGS.
25.2. AS-BUILT MARKUPS ARE TO INDICATE THE FOLLOWING ITEMS:
  25.2.1. ALL REVISIONS TO DRAWINGS FROM SITE INSTRUCTIONS AND CHANGE ORDERS ARE TO BE INDICATED.
  25.2.2. DEVICE LOCATION AND CIRCUITING WHERE DIFFERS FROM ORIGINAL DRAWINGS.
  25.2.3. LUMINAIRE TYPE, LOCATION, CIRCUITING AND CONTROL WHERE DIFFERS FROM ORIGINAL DRAWINGS.
  25.2.4. COMMUNICATION DROP ADDRESS.
  25.2.5. ALL ABANDONED JUNCTION BOXES AND CONDUITS.

26. MAINTENANCE MANUALS

26.1. PROVIDE OPERATION AND MAINTENANCE DATA FOR INCORPORATION INTO MAINTENANCE MANUALS AS FOLLOWS: IN HARD COVER 3 RING BINDER C/W INDEX TAB SEPARATORS. PROVIDE THREE (3) HARD COPIES AND ONE (1) PDF SOFTCOPY. SOFTCOPY MAY BE SUBMITTED USING COMPACT DISC, USB FLASH DRIVE OR EMAIL.
26.2. TECHNICAL DATA, PRODUCT DATA, SUPPLEMENTED BY BULLETINS COMPONENT ILLUSTRATIONS, EXPLODED VIEWS, TECHNICAL DESCRIPTIONS OF ITEMS AND PARTS LISTS. (ADVERTISING OR SALES LITERATURE IS NOT ACCEPTABLE)
26.3. WIRING AND SCHEMATIC DIAGRAMS.
26.4. NAMES AND ADDRESSES OF LOCAL SUPPLIERS FOR ITEMS INCLUDED IN MAINTENANCE MANUALS.
26.5. CABLE INSULATION TEST REPORTS.

Rev	Date	Description	Drawn	Design	App'd
B	2025-06-13	ISSUED FOR DEVELOPMENT PERMIT	MA	MA	EH
A	2025-05-16	ISSUED FOR 100% DEVELOPMENT DESIGN	MA	MA	MB

UBC THE UNIVERSITY OF BRITISH COLUMBIA

ORIGINAL DWG SIZE: ANSI D (22" x 34")

McElhanney

Suite 200
858 Beatty Street
Vancouver BC
Canada V6B 1C1
T 604 683 8521

PRELIMINARY
NOT FOR
CONSTRUCTION

THIS DRAWING HAS NOT BEEN APPROVED AND MAY CONTAIN ERRORS AND OMISSIONS

THE UNIVERSITY OF BRITISH COLUMBIA
6200 UNIVERSITY BLVD, VANCOUVER, BC V6T 1Z4

UBC SOUTH CAMPUS WORKS YARD
ELECTRICAL
SPECIFICATIONS

Drawing No.
E900

Project Number
2121-01293-00

Rev.
B

DESTROY ALL PRINTS BEARING PREVIOUS REVISION

DATE: 2025-06-13, 16:18 FILE: \\corp\TAL-colo\2121\Projects\21210129300 UBC South Campus Work Yard\07_DRAWINGS\01_Sheets\01293-E0-100-104.dwg

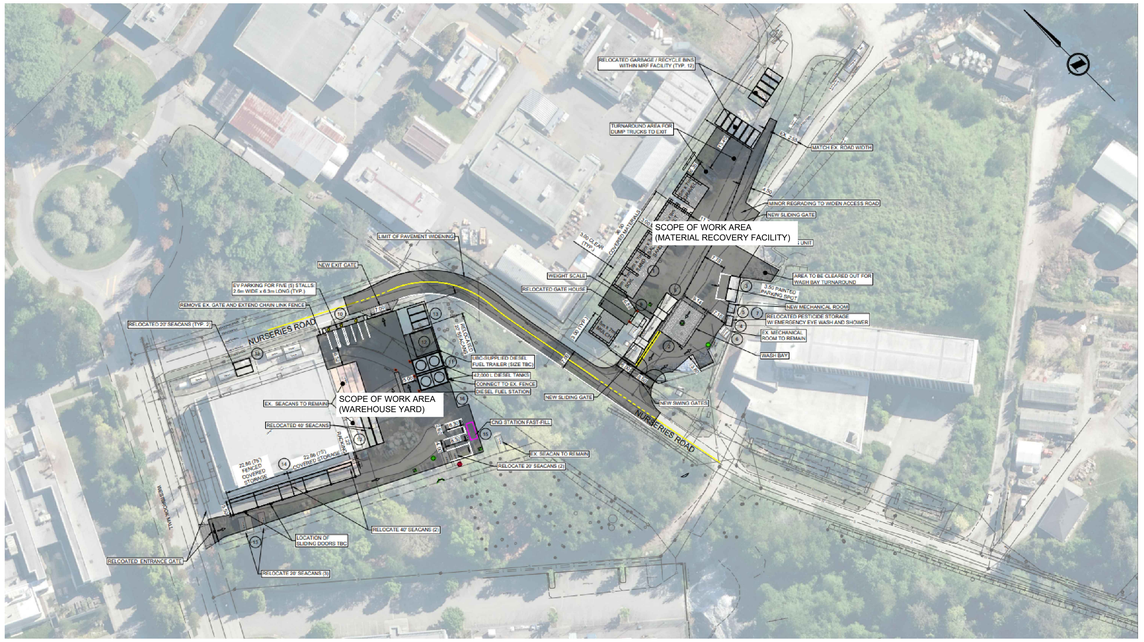

TRUE NORTH

1 M000 **SITE PLAN**

SCALE: NTS

MECHANICAL GENERAL NOTES

1. THE MECHANICAL SYSTEM SHALL CONSIST OF ALL WORK SHOWN ON THE DRAWINGS, DIAGRAMS, SCHEMATICS AND AS DESCRIBED IN THE SPECIFICATIONS.
2. THE MECHANICAL PLANS ARE DIAGRAMMATIC IN NATURE AND DO NOT ATTEMPT TO SHOW ALL REQUIRED OFFSETS. REFER TO CIVIL AND ELECTRICAL DRAWINGS FOR ADDITIONAL CONSTRUCTION DETAILS.
3. COORDINATE THE DRAWINGS WITH THE SPECIFICATIONS AND IN CASES WHERE CONFLICTS OCCUR THE MOST STRINGENT REQUIREMENT SHALL APPLY.
4. CONTRACTOR TO COORDINATE ALL MECHANICAL WORK WITH THAT OF OTHER TRADES TO ENSURE PROPER AND ADEQUATE INTERFACE WITH THE WORK OUTLINED FOR THIS PROJECT.
5. CONTRACTOR TO PROVIDE HORIZONTAL AND VERTICAL CLEARANCE REQUIREMENTS AS PER CEC (CANADIAN ELECTRICAL CODE) FOR ALL INSTALLED EQUIPMENT. OFFSET MECHANICAL WORK AS REQUIRED TO MEET THIS REQUIREMENT.
6. MECHANICAL EQUIPMENT SHALL NOT BE USED FOR TEMPORARY HEATING DURING THE CONSTRUCTION PROCESS. A WRITTEN LETTER FROM THE OWNER IS REQUIRED TO DO SO.
7. THE CONTRACTOR SHALL BE REQUIRED TO ATTEND A PRE-BID WALK THROUGH TO ENSURE A PROPER UNDERSTANDING OF THE MECHANICAL SCOPE OF WORK.
8. CONTRACTOR IS RESPONSIBLE FOR REVIEWING AND VERIFYING ACTUAL ON-SITE CONDITIONS AND EQUIPMENT LOCATIONS PRIOR TO ANY AND ALL DEMOLITION WORK AND/OR EQUIPMENT REMOVAL.
9. CONTRACTOR TO INCLUDE AS A PART OF THE BID ALL COSTS ASSOCIATED WITH CUTTING AND PATCHING THAT IS REQUIRED TO INSTALL ALL NEW MECHANICAL SYSTEMS AS REQUIRED TO MEET THE SITE CONDITIONS AS SHOWN ON THE DRAWINGS. PATCHING SHALL MEET THE AESTHETIC CONDITIONS WHICH WAS THE CONDITION PRIOR TO ANY CUTTING BEING PREFORMED.
10. CONTRACTOR TO PROPERLY SEAL AND REPAIR ANY AND ALL DAMAGE THAT IS A RESULT OF REMOVAL OR DEMOLITION OF MECHANICAL EQUIPMENT. THIS INCLUDES BUT IS NOT LIMITED TO WALL, DOOR, CEILINGS, ETC.
11. THE EXISTING FACILITIES MECHANICAL SYSTEMS SHALL REMAIN OPERATIONAL DURING THE CONSTRUCTION AND RENOVATION PERIOD. CONTRACTOR TO COORDINATE CONSTRUCTION ACTIVITIES AND PHASING WITH OWNER TO MINIMIZE DISRUPTIONS TO OWNERS OPERATIONS AND ACCESS, AND TO ENSURE SAFETY OF THE USERS. PROVIDE ALL MEASURES REQUIRED TO PREVENT HAZARDS TO PEOPLE AND DAMAGE TO ITEMS REMAINING INCLUDING BUT NOT LIMITED TO DAMAGE FROM DUST AND HEAT.
12. THE EXISTING DRAWINGS HAVE BEEN PREPARED, IN PART, ON THE BASIS OF INFORMATION COMPILED AND FURNISHED BY OTHERS. AS A RESULT, THE ENGINEER WILL NOT BE RESPONSIBLE FOR ANY ERRORS OR OMISSIONS WHICH HAVE BEEN INCORPORATED INTO THIS DOCUMENT.
13. DURING REMOVAL OF ITEMS SO INDICATED, CAUTION SHOULD BE USED TO PREVENT DAMAGE TO ANY EQUIPMENT HAVING SALVAGE VALUE. ALL REUSABLE SALVAGED MATERIAL SHALL REMAIN THE PROPERTY OF THE OWNER AND BE RETAINED FOR THEIR INSPECTION. ONLY ITEMS AGREED BY THE OWNER SHALL BE DISPOSED OF BY THE CONTRACTOR.
14. CONTRACTOR SHALL COORDINATE AND SCHEDULE WORK WITH FACILITY TO LIMIT INTERFERENCE WITH OPERATIONS.

MECHANICAL ABBREVIATIONS

AD	AREA DRAIN	KW	KILOWATT
AFF	ABOVE FINISHED FLOOR	KS	KITCHEN SINK
AHU	AIR HANDLING UNIT	LV	LAVATORY
ARCH	ARCHITECTURAL	LAT	LEAVING AIR TEMPERATURE
BB	BASEBOARD HEATER	LWT	LEAVING WATER TEMPERATURE
BDD	BACKDRAFT DAMPER	MAU	MAKE-UP AIR UNIT
BF	BOTTLE FILLER	MAX	MAXIMUM
BFP	BACKFLOW PREVENTER	MH	MANHOLE
BHP	BREAK HORSEPOWER	MBH	1000 BRITISH THERMAL UNITS/HOUR
BMS	BUILDING MANAGEMENT SYSTEM	MD	MOTORIZED DAMPER
BT	BATH TUB	MECH	MECHANICAL
CB	CATCH BASIN	MIN	MINIMUM
CFM	CUBIC FEET PER MINUTE	NFHB	NON FREEZE HOSE BIB
CLG	CEILING	NIC	NOT IN CONTRACT
CO	CLEANOUT	NC	NOISE CRITERIA/NORMALLY CLOSED
CONN	CONNECTION	NO	NORMALLY OPEN
C/W	COMPLETE WITH	NTS	NOT TO SCALE
CONT	CONTINUATION	O/A	OUTDOOR AIR
CTE	CONNECT TO EXISTING	OBD	OPPOSED BLADE DAMPER
DB	DRY BULB	OED	OPEN ENDED DUCT
DCVA	DOUBLE CHECK VALVE ASSEMBLY	OD	OUTSIDE DIAMETER
DDC	DIRECT DIGITAL CONTROL	POC	POINT OF CONNECTION
DEG	DEGREE	PRV	PRESSURE REDUCING VALVE
DF	DRINKING FOUNTAIN	PSI	POUNDS PER SQUARE INCH
DIA	DIAMETER	R/A	RETURN AIR
DN	DOWN	RF	RETURN FAN
DUC	DUAL CHECK VALVE	RM	ROOM
DW	DISH WASHER	RPM	REVOLUTIONS PER MINUTE
DWG	DRAWING	RWL	RAIN WATER LEADER
E/A	EXHAUST AIR	S/A	SUPPLY AIR
EAT	ENTERING AIR TEMPERATURE	SF	SUPPLY FAN
EF	EXHAUST FAN	SH	SHOWER
EFF	EFFICIENCY	SK	SINK
ELEC	ELECTRICAL	SS	STAINLESS STEEL
ENT	ENTERING	SP	STATIC PRESSURE
ESP	EXTERNAL STATIC PRESSURE	SPEC	SPECIFICATION
EWT	ENTERING WATER TEMPERATURE	ST	STORM
EXH	EXHAUST	T/A	TRANSFER AIR
FA	FROM ABOVE	TA	TO ABOVE
FB	FROM BELOW	TB	TO BELOW
FD	FLOOR DRAIN	TBC	TO BE CONFIRMED
FE	FIRE EXTINGUISHER	TBD	TO BE DETERMINED
FFD	FUNNEL FLOOR DRAIN	TD	TRENCH DRAIN
FLA	FULL LOAD AMPS	THRU	THROUGH
FLR	FLOOR	TS	TAMPER SWITCH
FPM	FEET PER MINUTE	TSP	TOTAL STATIC PRESSURE
GPM	GALLONS PER MINUTE	TYP	TYPICAL
GWB	GYPSUM WALL BOARD	UR	URINAL
HD	HUB DRAIN	VFD	VARIABLE FREQUENCY DRIVE
HB	HOSE BIBB	VTR	VENT THROUGH ROOF
HP	HORSEPOWER	W	WATER MAIN
ID	INSIDE DIAMETER	WB	WET BULB
INV	INVERT	WC	WATER CLOSET
JS	JANITOR SINK	WG	WATER GAUGE

MECHANICAL DRAWING LIST

DRAWINGS NO.	DESCRIPTION	SCALE
M000	SITE PLAN, NOTES, LEGENDS, AND DRAWINGS LIST	N.T.S.
M001	MECHANICAL EQUIPMENT SCHEDULES AND MOTORLIST	N.T.S.
M002	MECHANICAL EQUIPMENT SCHEDULES	N.T.S.
M100	WAREHOUSE YARD SITE LAYOUT PLAN	1:250
M101	MATERIAL RECOVERY FACILITY SITE LAYOUT PLAN	1:250
M200	DETAILS	N.T.S.
M201	DETAILS	N.T.S.
M202	DETAILS	N.T.S.
M300	SPECIFICATIONS	N.T.S.

SYMBOL SCHEDULE

PIPING SYSTEMS

- DOMESTIC COLD WATER (DCW)
- DOMESTIC HOT WATER (DHW)
- DOMESTIC HOT WATER RECIRC. (DHWR)
- SANITARY VENT
- SAN — SANITARY SEWER ABOVE GRADE
- SAN — SANITARY SEWER BELOW GRADE
- ST — STORM SEWER ABOVE GRADE
- ST — STORM SEWER BELOW GRADE
- X — DRAIN TILE
- IR — IRRIGATION
- G — GAS
- C — CONDENSATE DRAIN
- FOS — FUEL OIL SUPPLY
- FOR — FUEL OIL RETURN
- CHWS — CHILLED WATER SUPPLY
- CHWR — CHILLED WATER RETURN
- CONDS — CONDENSER WATER SUPPLY
- CONDR — CONDENSER WATER RETURN
- RS — REFRIGERANT SUCTION(GAS)
- RL — REFRIGERANT LIQUID

FITTINGS AND VALVES

- DIRECTION OF FLOW
- PIPE DROP
- PIPE RISE
- PIPE TEE UP
- PIPE TEE DOWN
- PIPE UNION
- PIPE CLEAN-OUT
- PIPE CLEAN-OUT TO GRADE
- PIPE CAP-OFF
- ISOLATION VALVE
- ISOLATION VALVE (NORMALLY CLOSED)
- CHECK VALVE
- 2-WAY CONTROL VALVE
- 3-WAY CONTROL VALVE
- SOLENOID VALVE
- BALANCING VALVE
- CIRCUIT SETTER VALVE
- PRESSURE REDUCING VALVE
- PRESSURE INDEPENDENT VALVE
- STRAINER
- RELIEF VALVE
- BACKFLOW PREVENTOR
- AUTOMATIC AIR VENT
- SEISMIC GAS SHUT-OFF VALVE
- PIPE ANCHOR
- EXPANSION JOINT
- FLEX COUPLING
- PIPE SLEEVE
- HEAT TRACING

OUTLETS AND DRAINS

- OPEN DRAIN
- HOSE-BIBB
- FLOOR DRAIN
- FUNNEL FLOOR DRAIN
- ROOF DRAIN
- AREA DRAIN
- P-TRAP
- VENT TO ABOVE

MECHANICAL EQUIPMENT

- PUMP
- CABINET FAN
- PROPELLER FAN
- UNIT HEATER
- FORCE FLOW HEATER
- REHEAT COIL

SYSTEM MONITORING AND CONTROLS

- T — ROOM TEMPERATURE SENSOR
- RT — REVERSE ACTING TEMPERATURE SENSOR
- S — TEMPERATURE SENSOR
- H — HUMIDITY SENSOR
- CO_2 — CO_2 SENSOR
- T — PIPE TEMPERATURE SENSOR
- P — PRESSURE GUAGE
- THERMOMETER
- F/S — FLOW SWITCH
- GM — GAS METER
- WM — WATER METER
- CONTROL WIRING

DUCTWORK

- SUPPLY OR OUTDOOR AIR DUCT UP
- SUPPLY OR OUTDOOR AIR DUCT DOWN
- RETURN AIR DUCT UP
- RETURN AIR DUCT DOWN
- EXHAUST AIR DUCT UP
- EXHAUST AIR DUCT DOWN
- TURNING VANES
- ACOUSTIC INSULATION
- BALANCING DAMPER
- BDD — BACKDRAFT DAMPER
- MOTORIZED DAMPER
- FIRE DAMPER - VERTICAL
- FIRE DAMPER - HORIZONTAL
- FIRE/SMOKE DAMPER
- DUCT CAP-OFF
- RETURN OR EXHAUST AIR GRILLE
- UC — UNDER-CUT DOOR

FIRE PROTECTION

- FIRE EXTINGUISHER
- FIRE DEPARTMENT SIAMESE CONNECTION
- PENDANT SPRINKLER HEAD
- EXT. COVERAGE PENDANT SPRINKLER HEAD
- UPRIGHT SPRINKLER HEAD
- EXT. COVERAGE UPRIGHT SPRINKLER HEAD
- UP AND DOWN SPRINKLER HEAD
- UP AND DOWN EXTENDED COVERAGE HEAD
- SIDEWALL SPRINKLER HEAD
- EXTENDED COVERAGE SIDEWALL HEAD
- DRY SPRINKLER ALARM VALVE
- SP — WET SPRINKLER SUPPLY LINE
- DRY — DRY SPRINKLER SUPPLY LINE
- PRE — PRE-ACTION SPRINKLER LINE
- F — FIRE LINE TO STANDPIPE

EQUIPMENT TAGS & CALLOUTS

- GRILLE TYPE / NECK/GRILLE SIZE / AIR VOLUME
- EQUIPMENT/FIXTURE TYPE
- GENERAL NOTE
- DRAWING REVISION
- M- DETAIL NUMBER / DRAWING NUMBER
- M- SECTION NUMBER / DRAWING NUMBER

BUILDING LOAD SUMMARY - WY

DESCRIPTION	LOAD	UNITS	PIPE SIZE (MM)
GAS (34 KPA)	774	kW	25Ø

BUILDING LOAD SUMMARY - MRF

DESCRIPTION	LOAD	UNITS	PIPE SIZE (MM)
DOMESTIC WATER	166	FU	75Ø
GAS (14 KPA)	204	kW	25Ø

Rev	Date	Description	Drawn	Design	App'd
B	2025-06-13	ISSUED FOR DEVELOPMENT PERMIT	MC/SD	MC/SD	IT
A	2025-05-16	ISSUED FOR 100% DEVELOPMENT DESIGN	MC/SD	MC/SD	IT

THE UNIVERSITY OF BRITISH COLUMBIA

ORIGINAL DWG SIZE: A1 (594 x 841mm)

McElhanney
Suite 2300
13450 102nd Avenue
Surrey BC
Canada V3T 5X3
T 604 596 0391

AMEGroup
200 - 638 Smithe St
Vancouver BC, V6B 1E3
T.604-684-5995 amegroup.ca

PRELIMINARY NOT FOR CONSTRUCTION

THIS DRAWING HAS NOT BEEN APPROVED AND MAY CONTAIN ERRORS AND OMISSIONS

THE UNIVERSITY OF BRITISH COLUMBIA
6200 UNIVERSITY BLVD, VANCOUVER, BC V6T 1Z4

UBC SOUTH CAMPUS WORK YARD SITE PLAN, NOTES, LEGENDS, AND DRAWING LIST

Drawing No. M000

Project Number 2121-01293-00

Rev. B

MECHANICAL MOTORLIST

UNIT NUMBER	QTY	UNIT DESCRIPTION	UNIT LOCATION	ELECTRICAL LOAD MCA	FLA	KW	HP	VOLT	PH	EQUIPMENT S	I	C	STARTER S	I	C	TYPE	DISCONNECT S	I	C	CONTROL S	I	C	TYPE	EMERGENCY POWER (YES/NO)	NOTES
		EMERGENCY EYEWASH AND SHOWER																							
EW-MRF-1	1	ELECTRICAL CONNECTION	MRF					120	1	M	M	E	-	-	-	-	E	E	E	M	M	E	INT		
		HEAT MAINTENANCE CABLE																							
HMC-MRF-1	1	HEAT TRACE FOR EMERGENCY SHOWER/EYEWASH	MRF			0.75		208	1	M	M	E	-	-	-	-	E	E	E	M	M	E	INT		
		PUMP																							
P-MRF-1	1	BOOSTER PUMP	MRF - NEW MECHANICAL ROOM				3	575	3	M	M	E	M	M	E	VFD	E	E	E	M	M	E	PS		
P-MRF-2	1	BOOSTER PUMP	MRF - NEW MECHANICAL ROOM				3	575	3	M	M	E	M	M	E	VFD	E	E	E	M	M	E	PS		
		UNIT HEATER																							
UH-MRF-1	1	ELECTRIC UNIT HEATER	MRF - NEW MECHANICAL ROOM			3		208	1	M	M	E	-	-	-	-	E	E	E	M	M	E	T		
		WATER HEATER (GAS FIRED)																							
HWT-MRF-1	1	CONTROLS FOR HOT WATER TANK FOR EYEWASH/SHOWER	MRF - NEW MECHANICAL ROOM					120	1	M	M	E	-	-	-	-	E	E	E	M	M	E	INT		
HWT-MRF-2	1	CONTROLS FOR HOT WATER TANK FOR NOVICLEAN	MRF - NEW MECHANICAL ROOM					120	1	M	M	E	-	-	-	-	E	E	E	M	M	E	INT		
		NOVICLEAN SYSTEM																							
-	1	NOVICLEAN SYSTEM	MRF - WASH BAY				5	575	3	-	-	E	-	-	-	-	E	E	E	-	-	E	INT		
-	2	HEAT TRACE FOR NOVICLEAN SYSTEM	MRF - WASH BAY			0.75		120	1	M	M	E	-	-	-	-	E	E	E	M	M	E	INT		
		HEAT TRACE																							
HT-MRF-1	1	HEAT TRACE FOR HOSE BIB PIPING	MRF - EXISTING TRAILER			0.75		120	1	M	M	E	-	-	-	-	E	E	E	M	M	E	INT		
		FUEL DISPENSER																							
FD-WY-1	1	FUEL DISPENSER	WAREHOUSE YARD					120	1	M	M	E	-	-	-	-	E	E	E	M	M	E	INT	Y	
		PUMP																							
P-WY-1	1	FUEL TRANSFER PUMP	WAREHOUSE YARD DIESEL TANK				0.75	208	1	M	M	E	M	M	E	PCS	E	E	E	M	M	E	VFD	Y	
P-WY-2	1	FUEL TRANSFER PUMP	WAREHOUSE YARD DIESEL TANK				0.75	208	1	M	M	E	M	M	E	PCS	E	E	E	M	M	E	VFD	Y	
		FUEL SYSTEM ACCESSORIES																							
-	2	LEVEL INDICATOR	WAREHOUSE YARD DIESEL TANK					120	1	M	M	E	-	-	-	-	E	E	E	M	M	E	LS	Y	
-	2	LEAK DETECTION	WAREHOUSE YARD DIESEL TANK					120	1	M	M	E	-	-	-	-	E	E	E	M	M	E	-	Y	

SUPPLIER / INSTALL / WIRE CODES:
MECH = MECHANICAL
ELEC = ELECTRICAL
G = GENERAL CONTRACTOR
S = SUPPLIED BY
I = INSTALLED BY
C = CONNECTED BY

STARTER CODES:
MAN = MANUAL STARTER
HOA = MAGNETIC STARTER W/ HAND/OFF/AUTO SWITCH W/ AUX. CONTACTS
MAG = MAGNETIC STARTER C/W AUX STATUS CONTACTS
MRR = MOTOR RATED RELAY, 24 VAC COIL & MOTOR PROTECTION SWITCH
PCS = PACKAGED CONTROL SYSTEM
VFD = VARIABLE FREQUENCY DRIVE
RVS = REDUCED VOLTAGE STARTER
WS = WALL SWITCH
CP = CONTROL PANEL

CONTROL DEVICE CODES:
AQUA = PUMP CONTROLLED BY AQUASTAT
BMS = BLDG MANAGEMENT SYSTEM
ES = END SWITCH
ET = LINE VOLTAGE T'STAT
FA = FIRE ALARM
FAP = FIRE ALARM PANEL
FS = FLOW SWITCH
GS = GAS SENSOR
H = HUMIDITY SENSOR
I = INTERLOCK, SEE NOTES
LIGHT = WIRED TO LIGHT SWITCH
LS = LEVEL SWITCH
OS = OCCUPANT SENSOR
PS = PRESSURE SWITCH
R. STAT = REVERSE ACTING THERMOSTAT
TC = TIME CLOCK
T = LOW VOLTAGE T'STAT OR SENSOR
TS = TAMPER SWITCH
VS = VARIABLE SPEED SWITCH
WS = WALL SWITCH

ELECTRICAL LOAD CODES:
BHP = BRAKE HORSEPOWER
FLA = UNIT FULL LOAD AMPS
HP = UNIT OR MOTOR HORSE POWER
PH = POWER PHASE
MCA = MINIMUM CIRCUIT AMPS
VOLT = REQUIRED SUPPLY VOLTAGE

MISCELLANEOUS CODES:
FFCP = FIRE FIGHTERS CONTROL PANEL
FRAC = FRACTIONAL HORSEPOWER
INT = INTEGRAL PART OF UNIT

GENERAL NOTES:
A. ALL FIRE ALARM DEVICES WIRED BY ELECTRICAL
B. CONTROL PANELS ARE SHIPPED LOSS & REQUIRE FIELD WIRING
C. PCS EQUIPMENT REQUIRES SINGLE SOURCE POWER CONNECTION, UNLESS NOTED OTHERWISE
D. CP, VFD EQUIPMENT REQUIRES POWER WIRING TO AND FROM CONTROL PANEL TO CONTROLLED EQUIPMENT

NOTES:
1. SINGLE POINT POWER CONNECTION (EXCEPT FOR LIGHTS).
2. SPRINKLER ZONE VALVES AND FLOW SWITCHES TO BE MONITORED BY THE FIRE ALARM SYSTEM.
3. FIRE ALARM PANEL TO HAVE DRY CONTACT FOR BMS
4. MONITOR STATUS AT FFCP
5. PROVIDE SWTICH AT FFCP
6. FFCP TO ENABLE DURING ALARM
7. FFCP TO DISABLE DURING ALARM

FUEL DISPENSER

EQUIPMENT TAG	LOCATION	SERVICE	DESCRIPTION	MANUFACTURER	MODEL NO	FLOW RATE (L/S)	ELECTRICAL	WEIGHT (KG)	NOTES
FD-WY-1	WAREHOUSE YARD	DIESEL	DIESEL FUEL DISPENSER	GASBOY	ATLASX 9153GTW1M	1.39	120/1/60	227	ALL

NOTES:
1 CONNECT TO EXISTING VEEDER ROOT CONSOLE.
2 DUAL SIDE DISPENSERS AND HOSES
3 INTERNAL FILTER, ELECTRONIC DISPENSER C/W OPW HANGING HARDWARE
4 C/W TRANSITION SUMPS (INCLUDING AT DISPENSER AND AT THE STORAGE TANK), LEAK DETECTION MONITORING WITH ALARM, AND THE ASSOCIATED DOUBLE WALL FLEXIBLE PIPES..
5 C/W ALL REQUIRED COMPONENTS (BOTH HARDWARES AND SOFTWARE), ACCESSORIES FOR FULL OPERATIONAL SYSTEM.
6 C/W 24VAC TRANSFORMER FOR MECHANICAL LOW VOLTAGE CONTROLS.
7 C/W SUBMERSIBLE PUMP (FOR EACH TANK, IE. TOTAL 2) INCLUDING STARTERS AND DISCONNECT.

UNIT HEATER (ELECTRIC)

EQUIPMENT TAG	QTY	LOCATION	MANUFACTURER	TYPE	MOUNTING TYPE	MODEL	HGT CAP (KW)	ELEC (V/PH/HZ)	NOTES
UH-MRF-1	1	MRF - NEW MECHANICAL ROOM	OUELETTE	ELECTRIC	WALL-MOUNTED	OAC03000-T	3.0	240/1/60	ALL

NOTES:
1 PROVIDE MOUNTING BASE.
2 PROVIDE WALL MOUNTED PROGRAMMABLE THERMOSTAT

PUMP SCHEDULE

EQUIPMENT TAG	DESCRIPTION	LOCATION	TYPE	MANUFACTURER	MODEL	FLUID TEMP. (DEG C)	FLOW (EA) (L/S)	HEAD (EA) (M)	IMPELLER SIZE (MM)	MOTOR (HP)	MOTOR (RPM)	POWER (V/PH/HZ)	NOTES
P-MRF-1	BOOSTER PUMP	MRF - NEW MECHANICAL ROOM	DUPLEX	AMSTRONG	NPS-120010-10S	15.6	6.31	14.0	109.5	3	2600	575/3/60	ALL
P-MRF-2	BOOSTER PUMP	MRF - NEW MECHANICAL ROOM	DUPLEX	AMSTRONG	NPS-120010-10S	15.6	6.31	14.0	109.5	3	2600	575/3/60	ALL

NOTES:
1. PROVIDE WITH FULL SIZE IMPELLOR.
2. EACH AT 100% CAPACITY WITH ONE AS STANDBY.
3. C/W MODULE FOR CONNECTION TO DDC.

DOMESTIC WATER HEATER (GAS FIRED)

EQUIPMENT TAG	QTY	LOCATION	SERVICE	MANUFACTURER	MODEL	VOLUME (L)	INPUT (kW)	RECOVERY CAPACITY (LPH)	TEMP. RISE (DEG C)	POWER (V/PH/HZ)	OPERATING WEIGHT (KG)	NOTES
HWT-MRF-1	1	MRF - NEW MECHANICAL ROOM	EYEWASH/SHOWER	AO SMITH	BTH-300 Mxi	450	88	1321	56	120/1/60	825	ALL
HWT-MRF-2	1	MRF - NEW MECHANICAL ROOM	NOVICLEAN	MAGIKIST	HWG40	151	116	1249	56	120/1/60	418	

NOTES:
1. DRAIN PAN
2. T&P VALVE
3. VACUUM BREAKER
4. CONCENTRIC VENT KIT
5. ACID NEUTRALIZATION KIT

Rev	Date	Description	Drawn	Design	App'd
B	2025-06-13	ISSUED FOR DEVELOPMENT PERMIT	MC/SD	MC/SD	IT
A	2025-05-16	ISSUED FOR 100% DEVELOPMENT DESIGN	MC/SD	MC/SD	IT

THE UNIVERSITY OF BRITISH COLUMBIA

ORIGINAL DWG SIZE: A1 (594 x 841mm)

McElhanney
Suite 2300
13450 102nd Avenue
Surrey BC
Canada V3T 5X3
T 604 596 0391

AMEGroup
200 - 638 Smithe St
Vancouver BC, V6B 1E3
T.604-684-5995 amegroup.ca

PRELIMINARY NOT FOR CONSTRUCTION

THIS DRAWING HAS NOT BEEN APPROVED AND MAY CONTAIN ERRORS AND OMISSIONS

THE UNIVERSITY OF BRITISH COLUMBIA
6200 UNIVERSITY BLVD, VANCOUVER, BC V6T 1Z4

UBC SOUTH CAMPUS WORK YARD
MECHANICAL EQUIPMENT
SCHEDULES AND MOTORLIST

Drawing No.
M001

Project Number 2121-01293-00
Rev. B

FUEL STORAGE TANK

EQUIPMENT TAG	LOCATION	SERVICE	DESCRIPTION	MANUFACTURER	MODEL NO	DIMENSIONS (MM)	CAPACITY (L)	CONSTRUCTION	WEIGHT (KG)	NOTES
	SEE DRAWINGS	DIESEL	ABOVE-GROUND VERTICAL DIESEL STORAGE TANK	AGI WESTEEL	CUSTOM TANK	3,480 Ø x 4,568 (H)	42,000	DOUBLE WALL	6,690	ALL

NOTES:

1. PROVIDE ALL OF THE COMPLETE REQUIREMENT AND COMPONENTS FOR INTEGRATION TO THE EXISTING THE FUEL MANAGAMENT SYSTEM.
2. PROVIDE ALL OF THE COMPLETE REQUIREMENT AND COMPONENT FOR INTEGRATION WITH THE NEW FUEL DISPENSING SYSTEM, SUCH AS LEAK DETECTION, CONTROL VALVE, SUBMERSIBLE PUMPS, TRANSITION SUMPS, ETC.
3. EXTERIOR TO BE SANDBLASTED TO SSPC-SP10, WITH 1 COAT OF EPOXY AND POLYURETHANE, AND SEAL WELDED, GROUND SANDBLASTED TO SSPC-SP10, WITH 2 COATS OF EPOXY TANK LINING.
4. LEVEL INDICATOR
5. C/W ACCESS STAIRS
6. ULC S601 - DOUBLE WALL VACUUM MONITORED TANK.
7. FLOATING SUCTION INSIDE TANK.
8. GROUNDING LUG.
10. INTERNAL SPLIT TANK FOR 4,000L GASOLINE AND 6,000L DIESEL.
11. C/W ALL REQUIRED COMPONENTS (BOTH HARDWARES AND SOFTWARE), ACCESSORIES FOR FULL OPERATIONAL SYSTEM.
12. NEW LEAK DETECTION SYSTEM TO BE CONNECTED TO THE EXISTING TLS-450 PLUS VEEDER ROOT.
13. C/W 24VAC TRANSFORMER FOR MECHANICAL LOW VOLTAGE CONTROLS.
14. DISCRIMINATING SENSORS AND ALARM FOR NEW TRANSITION SUMPS

EXISTING FUEL STORAGE TANK

EQUIPMENT TAG	LOCATION	SERVICE	DESCRIPTION	MANUFACTURER	MODEL NO	DIMENSIONS (MM)	CAPACITY (L)	CONSTRUCTION	WEIGHT (KG)	NOTES
	SEE DRAWINGS	DIESEL	ABOVE-GROUND VERTICAL DIESEL STORAGE TANK	TIDY STEEL-FAB LTD.	EC-T-801	3,620 Ø x 5,130 (H)	42,000	DOUBLE WALL	-	-

HEAT TRACE

EQUIPMENT TAG	SERVICE	MANUFACTURER	MEAN AMBIENT TEMP (DEG C)	PIPES SIZE (MM)	MODEL	CAPACITY (W/M)	ELECTRICAL INFO (V/Ph/Hz)	NOTES
HT-MRF-1	HOSE BIB PIPING	RAYCHEM	-9	20	XL-TRACE	16.35	120/1/60	1,2
HMC-MRF-1	EMERGENCY SHOWER/EYEWASH	RAYCHEM	-9	40	XL-TRACE	16.35	240/1/60	1,2
-	NOVICLEAN SYSTEM	RAYCHEM	-9	20	XL-TRACE	16.35	120/1/60	1,2

NOTES:

1. REFER TO MECHANICAL FLOOR PLANS FOR ACTUAL LENGTH OF HEAT TRACING REQUIRED
2. SEE MECHANICAL MOTORLIST FOR HEAT TRACING ELECTRICAL LOADS

Rev	Date	Description	Drawn	Design	App'd
B	2025-06-13	ISSUED FOR DEVELOPMENT PERMIT	MC/SD	MC/SD	IT
A	2025-05-16	ISSUED FOR 100% DEVELOPMENT DESIGN	MC/SD	MC/SD	IT

THE UNIVERSITY OF BRITISH COLUMBIA

ORIGINAL DWG SIZE: A1 (594 x 841mm)

McElhanney
Suite 2300
13450 102nd Avenue
Surrey BC
Canada V3T 5X3
T 604 596 0391

AMEGroup
200 - 638 Smithe St
Vancouver BC, V6B 1E3
T.604-684-5995 amegroup.ca

PRELIMINARY NOT FOR CONSTRUCTION

THIS DRAWING HAS NOT BEEN APPROVED AND MAY CONTAIN ERRORS AND OMISSIONS

THE UNIVERSITY OF BRITISH COLUMBIA
6200 UNIVERSITY BLVD, VANCOUVER, BC V6T 1Z4

UBC SOUTH CAMPUS WORK YARD
MECHANICAL EQUIPMENT
SCHEDULES

Drawing No.
M002

Project Number
2121-01293-00

Rev.
B

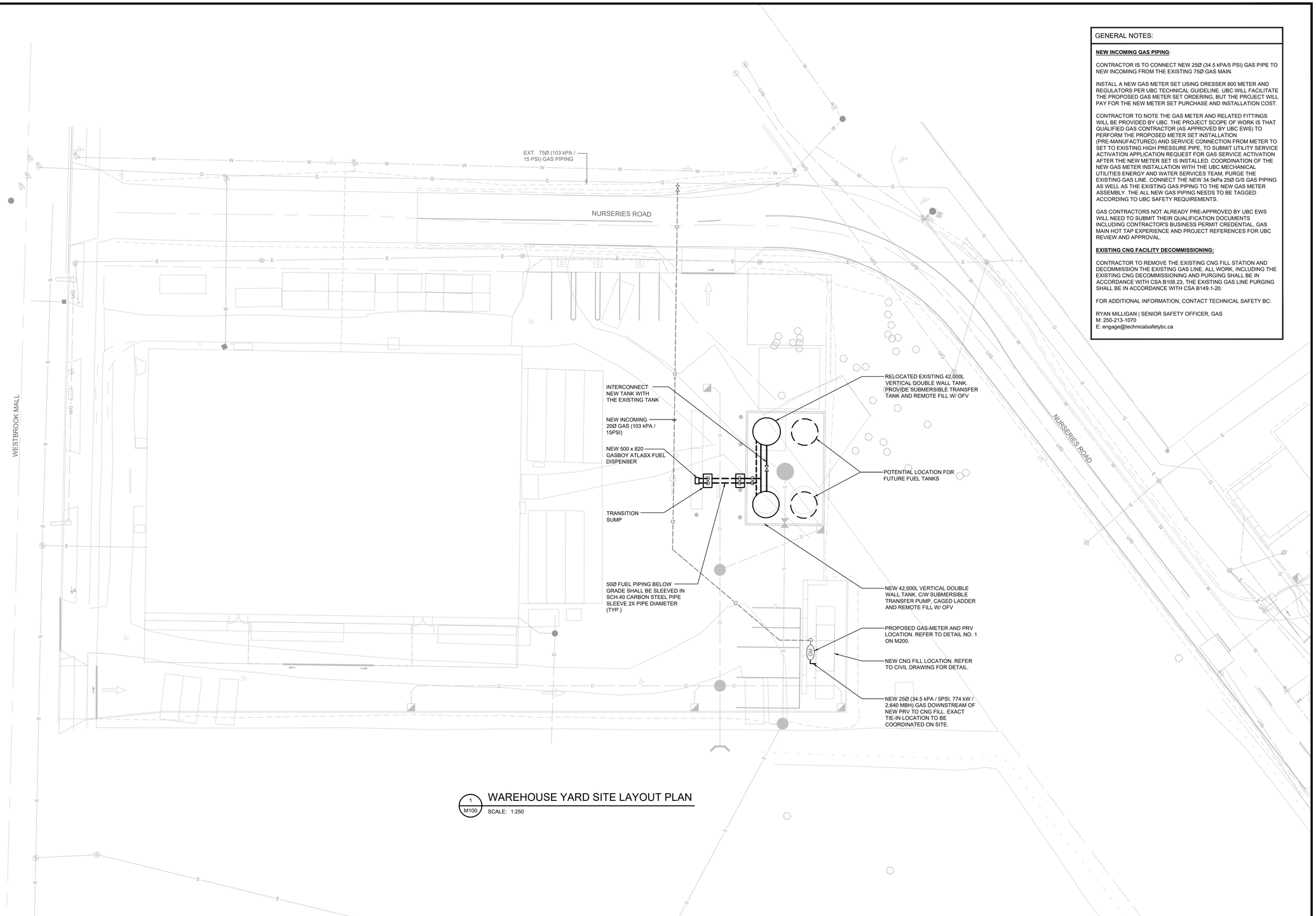

1 / M100 WAREHOUSE YARD SITE LAYOUT PLAN

SCALE: 1:250

GENERAL NOTES:

NEW INCOMING GAS PIPING:

CONTRACTOR IS TO CONNECT NEW 25Ø (34.5 kPA/5 PSI) GAS PIPE TO NEW INCOMING FROM THE EXISTING 75Ø GAS MAIN.

INSTALL A NEW GAS METER SET USING DRESSER 800 METER AND REGULATORS PER UBC TECHNICAL GUIDELINE. UBC WILL FACILITATE THE PROPOSED GAS METER SET ORDERING, BUT THE PROJECT WILL PAY FOR THE NEW METER SET PURCHASE AND INSTALLATION COST.

CONTRACTOR TO NOTE THE GAS METER AND RELATED FITTINGS WILL BE PROVIDED BY UBC. THE PROJECT SCOPE OF WORK IS THAT QUALIFIED GAS CONTRACTOR (AS APPROVED BY UBC EWS) TO PERFORM THE PROPOSED METER SET INSTALLATION (PRE-MANUFACTURED) AND SERVICE CONNECTION FROM METER TO SET TO EXISTING HIGH PRESSURE PIPE. TO SUBMIT UTILITY SERVICE ACTIVATION APPLICATION REQUEST FOR GAS SERVICE ACTIVATION AFTER THE NEW METER SET IS INSTALLED. COORDINATION OF THE NEW GAS METER INSTALLATION WITH THE UBC MECHANICAL UTILITIES ENERGY AND WATER SERVICES TEAM, PURGE THE EXISTING GAS LINE, CONNECT THE NEW 34.5kPa 25Ø G/S GAS PIPING AS WELL AS THE EXISTING GAS PIPING TO THE NEW GAS METER ASSEMBLY. THE ALL NEW GAS PIPING NEEDS TO BE TAGGED ACCORDING TO UBC SAFETY REQUIREMENTS.

GAS CONTRACTORS NOT ALREADY PRE-APPROVED BY UBC EWS WILL NEED TO SUBMIT THEIR QUALIFICATION DOCUMENTS INCLUDING CONTRACTOR'S BUSINESS PERMIT CREDENTIAL, GAS MAIN HOT TAP EXPERIENCE AND PROJECT REFERENCES FOR UBC REVIEW AND APPROVAL.

EXISTING CNG FACILITY DECOMMISSIONING:

CONTRACTOR TO REMOVE THE EXISTING CNG FILL STATION AND DECOMMISSION THE EXISTING GAS LINE. ALL WORK, INCLUDING THE EXISTING CNG DECOMMISSIONING AND PURGING SHALL BE IN ACCORDANCE WITH CSA B108.23, THE EXISTING GAS LINE PURGING SHALL BE IN ACCORDANCE WITH CSA B149.1-20.

FOR ADDITIONAL INFORMATION, CONTACT TECHNICAL SAFETY BC:

RYAN MILLIGAN | SENIOR SAFETY OFFICER, GAS
M: 250-213-1070
E: engage@technicalsafetybc.ca

Rev	Date	Description	Drawn	Design	App'd
B	2025-06-13	ISSUED FOR DEVELOPMENT PERMIT	MC/SD	MC/SD	IT
A	2025-05-16	ISSUED FOR 100% DEVELOPMENT DESIGN	MC/SD	MC/SD	IT

THE UNIVERSITY OF BRITISH COLUMBIA

TRUE NORTH

ORIGINAL DWG SIZE: A1 (594 x 841mm)

McElhanney
Suite 2300
13450 102nd Avenue
Surrey BC
Canada V3T 5X3
T 604 596 0391

AMEGroup
200 - 638 Smithe St
Vancouver BC, V6B 1E3
T.604-684-5995 amegroup.ca

PRELIMINARY NOT FOR CONSTRUCTION

THIS DRAWING HAS NOT BEEN APPROVED AND MAY CONTAIN ERRORS AND OMISSIONS

THE UNIVERSITY OF BRITISH COLUMBIA
6200 UNIVERSITY BLVD, VANCOUVER, BC V6T 1Z4

UBC SOUTH CAMPUS WORK YARD
WAREHOUSE YARD SITE LAYOUT PLAN

Drawing No. M100

Project Number 2121-01293-00

Rev. B

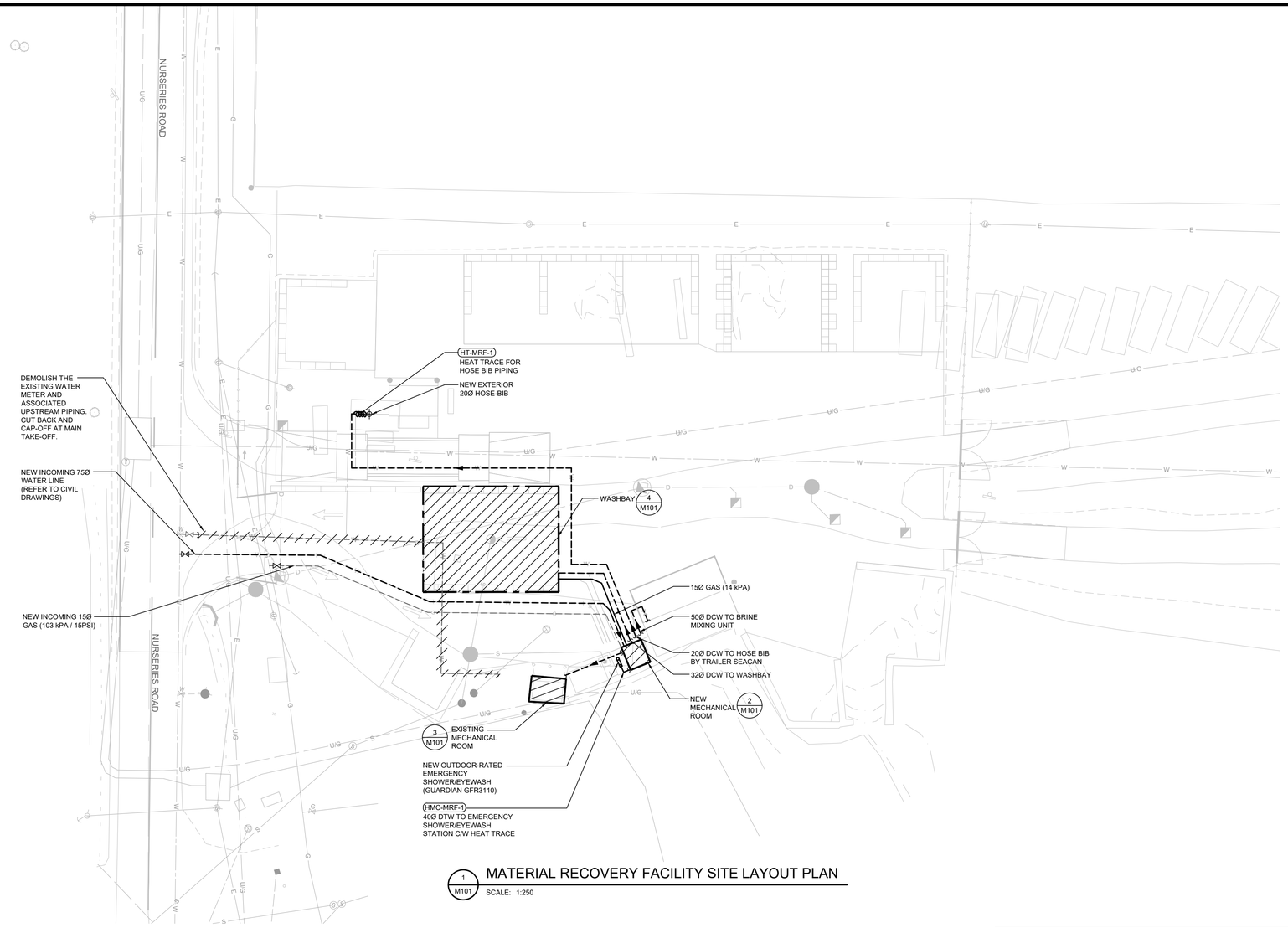

1 M101 MATERIAL RECOVERY FACILITY SITE LAYOUT PLAN

SCALE: 1:250

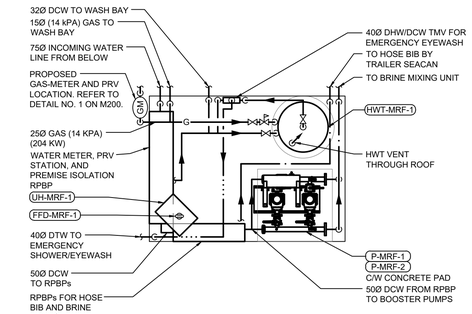

2 M101 NEW MECHANICAL ROOM DETAIL

SCALE: 1:50

3 M101 EXISTING MECHANICAL ROOM

SCALE: N.T.S.

GENERAL NOTES:

NEW INCOMING GAS PIPING:

CONTRACTOR IS TO CONNECT NEW 25Ø (14 kPA/2 PSI) GAS PIPE TO NEW INCOMING GAS FROM THE EXISTING 75Ø GAS MAIN.

INSTALL A NEW GAS METER SET USING DRESSER 800 METER AND REGULATORS PER UBC TECHNICAL GUIDELINE. UBC WILL FACILITATE THE PROPOSED GAS METER SET ORDERING, BUT THE PROJECT WILL PAY FOR THE NEW METER SET PURCHASE AND INSTALLATION COST.

CONTRACTOR TO NOTE THE GAS METER AND RELATED FITTINGS WILL BE PROVIDED BY UBC. THE PROJECT SCOPE OF WORK IS THAT QUALIFIED GAS CONTRACTOR (AS APPROVED BY UBC EWS) TO PERFORM THE PROPOSED METER SET INSTALLATION (PRE-MANUFACTURED) AND SERVICE CONNECTION FROM METER TO SET TO EXISTING HIGH PRESSURE PIPE, TO SUBMIT UTILITY SERVICE ACTIVATION APPLICATION REQUEST FOR GAS SERVICE ACTIVATION AFTER THE NEW METER SET IS INSTALLED. COORDINATION OF THE NEW GAS METER INSTALLATION WITH THE UBC MECHANICAL UTILITIES ENERGY AND WATER SERVICES TEAM, PURGE THE EXISTING GAS LINE, CONNECT THE NEW 14kPa 25Ø G/S GAS PIPING AS WELL AS THE EXISTING GAS PIPING TO THE NEW GAS METER ASSEMBLY. THE ALL NEW GAS PIPING NEEDS TO BE TAGGED ACCORDING TO UBC SAFETY REQUIREMENTS.

GAS CONTRACTORS NOT ALREADY PRE-APPROVED BY UBC EWS WILL NEED TO SUBMIT THEIR QUALIFICATION DOCUMENTS INCLUDING CONTRACTOR'S BUSINESS PERMIT CREDENTIAL, GAS MAIN HOT TAP EXPERIENCE AND PROJECT REFERENCES FOR UBC REVIEW AND APPROVAL.

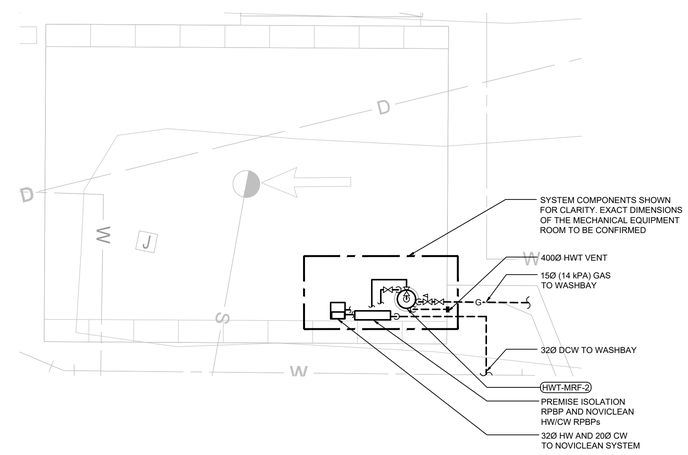

4 M101 WASHBAY DETAIL

SCALE: 1:100

Rev	Date	Description	Drawn	Design	App'd
B	2025-06-13	ISSUED FOR DEVELOPMENT PERMIT	MC/SD	MC/SD	IT
A	2025-05-16	ISSUED FOR 100% DEVELOPMENT DESIGN	MC/SD	MC/SD	IT

THE UNIVERSITY OF BRITISH COLUMBIA

TRUE NORTH

ORIGINAL DWG SIZE: A1 (594 x 841mm)

McElhanney
Suite 2300
13450 102nd Avenue
Surrey BC
Canada V3T 5X3
T 604 596 0391

AMEGroup
200 - 638 Smithe St
Vancouver BC, V6B 1E3
T.604-684-5995 amegroup.ca

PRELIMINARY NOT FOR CONSTRUCTION

THIS DRAWING HAS NOT BEEN APPROVED AND MAY CONTAIN ERRORS AND OMISSIONS

THE UNIVERSITY OF BRITISH COLUMBIA
6200 UNIVERSITY BLVD, VANCOUVER, BC V6T 1Z4

UBC SOUTH CAMPUS WORK YARD MATERIAL RECOVERY FACILITY SITE LAYOUT PLAN

Drawing No. M101

Project Number 2121-01293-00

Rev. B

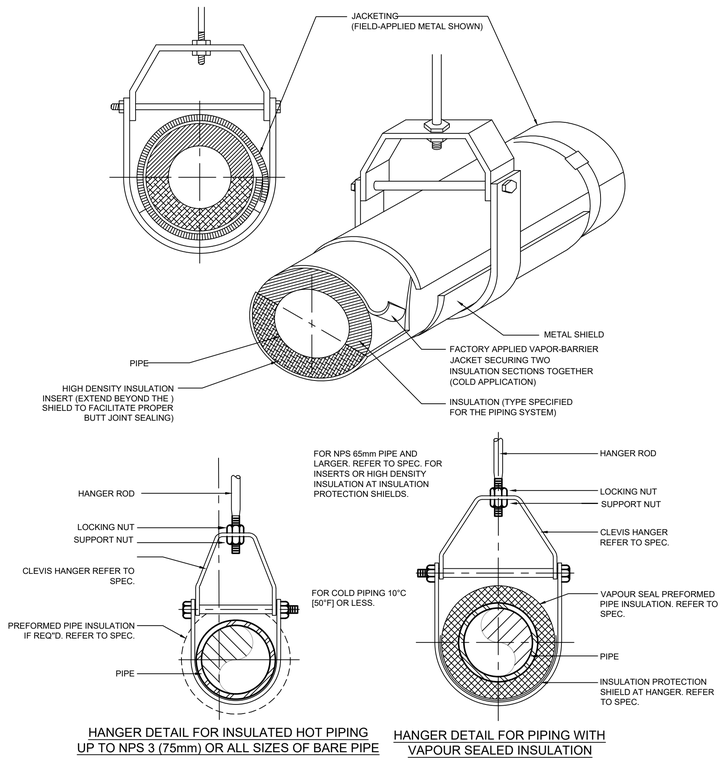

HANGER DETAIL FOR INSULATED HOT PIPING UP TO NPS 3 (75mm) OR ALL SIZES OF BARE PIPE

HANGER DETAIL FOR PIPING WITH VAPOUR SEALED INSULATION

5 / M200 INSULATED PIPE HANGERS

SCALE: NTS

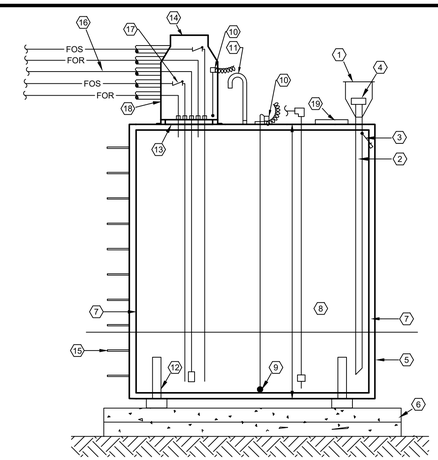

1. OPW 101 BG-2100 AND 19 L (5 GAL.) SPILL CONTAINER
2. 100MM (4") SCHED. 40 SEAMLESS RISER PIPE
3. OPW 61 SO-4000 OVERFILL VALVE c/w DROP TUBE.
4. TIGHT FITTING CUP & COLLAR
5. TANK CLEARANCES PER MANUFACTURER'S RECOMMENDATIONS
6. CONCRETE PAD
7. DOUBLE WALL STEEL OIL TANK
8. LOW LEVEL ALARM CONNECTED TO GENERATOR ALARM PANEL AND B.A.S.
9. INTERSTITIAL SENSOR
10. ELECTRICAL BOXES FOR LEAK DETECTION SYSTEM
11. FUEL OIL VENT
12. TANK SADDLE (TYPICAL FOR ALL)
13. ACCESS COVER
14. FLEXIBLE ENTRY BOOT (TYP.)
15. ACCESS LADDER
16. LEVEL INDICATOR COPPER LINE- TO BE RUN IN PVC CONDUIT.
17. INSTALL CHECK VALVES IN CONTAINMENT SUMP
18. FRP BONDED TOTAL CONTAINMENT SUMP
19. BOLTED MAN ACCESS

3 / M200 ABOVE GRADE FUEL OIL STORAGE TANK

SCALE: NTS

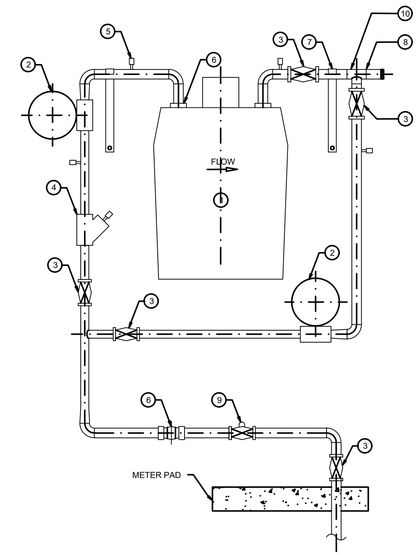

NOTES

1. TYPE OF METER BASED ON CAPACITIES/CONS.
   < 2000 CFH - DIAPHRAGM
   > 2000 CFH - TURBINE OR ROTARY
2. ALL MATERIAL TO BE SUPPLIED BY UBC UTILITIES. USER MUST PROVIDE THE REQUIRED GAS LOADS.
3. METER SET TO BE FABRICATED USING WELDED FITTINGS WHERE POSSIBLE.
4. METERS TO BE INSTALLED OUTDOORS ONLY.
5. METER ASSEMBLY TO MEET CANADA ELECTRICITY AND GAS INSPECTIONS ACT AND MEASUREMENT CANADA'S PRESSURE FACTOR MEASUREMENT (PFM) REQUIREMENTS.
6. BOLLARDS AND/OR CHAINLINK FENCE ARE REQUIRED WHERE THERE IS RISK OF DAMAGE BY VEHICLES OR VANDALISM.
7. METER TO BE INTEGRATED INTO ELECTRICAL METERING SYSTEM AS PER DIVISION-16, SECTION 16460, DRAWING E4-6.
8. DEMARCATION POINT OF SERVICE IS:
   a) IMMEDIATELY DOWNSTREAM LAST VALVE.
   b) IMMEDIATELY DOWNSTREAM OF SERVICE TEE IF THERE IS NO VALVE AT METER OUTLET.
9. SEISMIC VALVE IS INSTALLED ONLY IF REQUIRED BY DESIGN ENGINEER.

PART LIST:

1. DIAPHRAGM GAS METER (SEE NOTE 1)
2. GAS PRESSURE REGULATOR
3. GAS VALVE
4. STRAINER
5. PRESSURE TEST PORT
6. DIELECTRIC UNION
7. SUPPORT BRACKET
8. DEMARCATION POINT
9. SEISMIC VALVE (SEE NOTES)
10. SERVICE TEE

1 / M200 GAS METER INSTALLATION DETAIL

SCALE: NTS

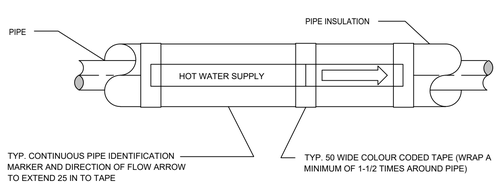

DETAIL NOTES

1. ALL DIMENSIONS IN MM.
2. APPLY A CONTINUOUS COATING OF CONTACT CEMENT TO THE LABEL TO ENSURE PERMANENT ADHESION
3. REFER TO SPECIFICATION FOR COLOUR CODING OF SERVICES AND INSTALLATION

6 / M200 PIPE IDENTIFICATION

SCALE: NTS

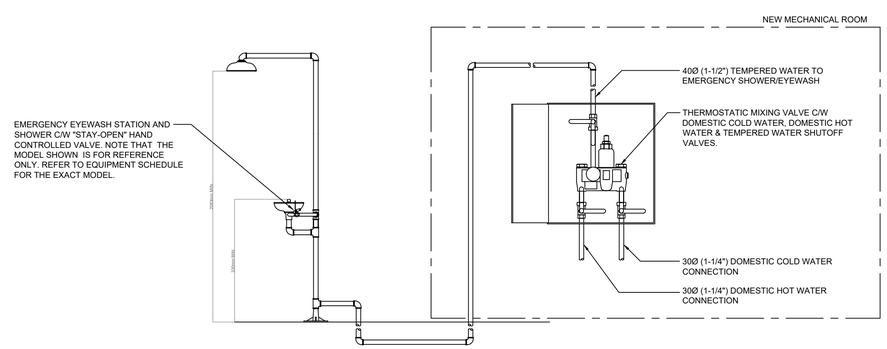

4 / M200 EMERGENCY SHOWER/EYEWASH PIPING

SCALE: NTS

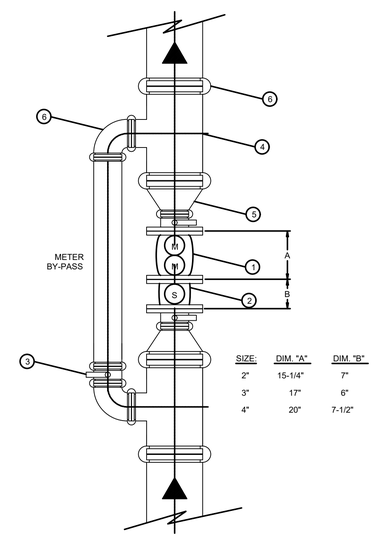

SIZE:	DIM. "A"	DIM. "B"
2"	15-1/4"	7"
3"	17"	6"
4"	20"	7-1/2"

NOTES

1. ALL MATERIAL TO BE SUPPLIED AND INSTALLED BY CONTRACTOR UNLESS OTHERWISE SPECIFIED.
2. PIPE MATERIAL:
   Ø4" AND LARGER TO BE CL 54 DUCTILE IRON (CEMENT LINED)
   SMALLER THAN Ø4" TO BE TYPE "K" COPPER
3. METER TO BE INTEGRATED INTO ELECTRICAL METERING SYSTEM AS PER DIVISION-16, SECTION 16460, DRAWING E4-6.
4. MINIMUM AND MAXIMUM INSTALLATION HEIGHT OF THE CENTRELINE OF THE WATER METER:
   MINIMUM ABOVE THE FINISHED FLOOR: 600 mm
   MAXIMUM ABOVE THE FINISHED FLOOR: 1350mm

PART LIST:

1. NEPTUNE WATER METER (COMPOUND) WITH TRICON-S REGISTER. READ OUT: PROREAD ARB PIT METER RECEPTACLE
   -SUPPLY ONLY BY UBC UTILITIES
2. NEPTUNE STRAINER - SUPPLY BY UBC UTIL.
3. VIC 300 BUTTERFLY VALVE (LOCKABLE REQUIRED)
4. VIC 25 REDUCING TEE (2 OFF)
5. VIC 50 REDUCER (2 OFF)
6. STYLE 77 STD FLEXIBLE COUPLING (4 OFF)

2 / M200 WATER METER DETAIL

SCALE: NTS

Rev	Date	Description	Drawn	Design	App'd
B	2025-06-13	ISSUED FOR DEVELOPMENT PERMIT	MC/SD	MC/SD	IT
A	2025-05-16	ISSUED FOR 100% DEVELOPMENT DESIGN	MC/SD	MC/SD	IT

THE UNIVERSITY OF BRITISH COLUMBIA

ORIGINAL DWG SIZE: A1 (594 x 841mm)

McElhanney
Suite 2300
13450 102nd Avenue
Surrey BC
Canada V3T 5X3
T 604 596 0391

AMEGroup
200 - 638 Smithe St
Vancouver BC, V6B 1E3
T.604-684-5995 amegroup.ca

PRELIMINARY NOT FOR CONSTRUCTION

THIS DRAWING HAS NOT BEEN APPROVED AND MAY CONTAIN ERRORS AND OMISSIONS

THE UNIVERSITY OF BRITISH COLUMBIA
6200 UNIVERSITY BLVD, VANCOUVER, BC V6T 1Z4

UBC SOUTH CAMPUS WORK YARD DETAILS

Drawing No. M200

Project Number 2121-01293-00

Rev. B

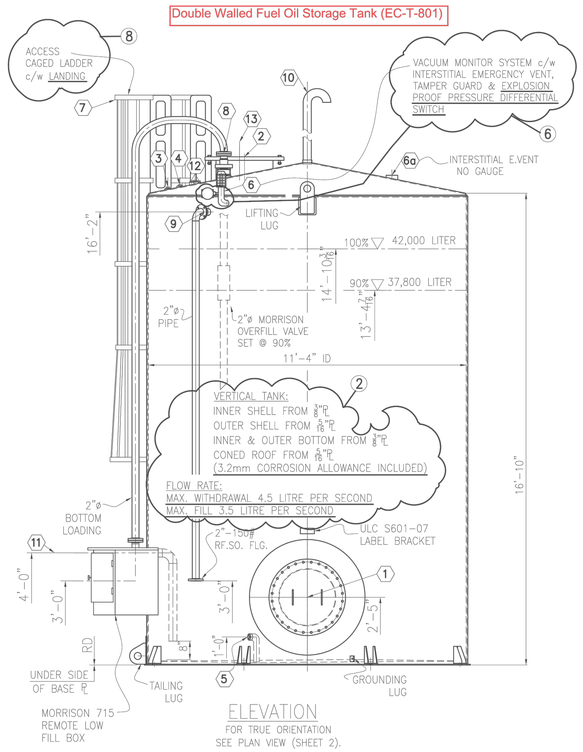

ELEVATION
FOR TRUE ORIENTATION SEE PLAN VIEW (SHEET 2).

PAINT NOTES:
-SANDBLASTED EXTERIOR
-APPLY 2 COATS OF CARBOGUARD 888 EPOXY
-AND ONE COAT OF 8815/6813 WHITE POLYURETHANE

REV.	DATE	DESCRIPTION	DRAWN BY	APPROVED BY
A	AUG 27, 2014	REVISED PER E-MAIL AUGUST 21, 2014	TB	JS
0	JUL 10, 2014	FOR APPROVAL	TB	JS

SHIPPING WEIGHT: 22,000 LBS

FUEL OIL TANK CONNECTION LEGEND

MK#	SIZE	CONNECTION TYPE	DESCRIPTION	POSITION	LOCATION
1	24"	FLG.	MANWAY	180°	SHELL
2	24"	FLG.	MANWAY/ EMERGENCY VENT	45°	ROOF
3	2"	CPLG	SPARE CONNECTION	70°	ROOF
4	2"	CPLG	SPARE CONNECTION	70°	ROOF
5	2"	CPLG	DRAIN	160°	SHELL
6	2½"	–	INTERSTITIAL MONITOR/ E.VENT	150°	SHELL
6a	2½"	–	INTERSTITIAL E.VENT	330°	SHELL
7	–		LADDER	45°	SHELL
8	2"	150# RF.SO.	FILL LINE (BOTTOM LOADING)	110°	SHELL
9	2"	150# RF.SO.	VAPOR / OVERFLOW LINE	140°	SHELL
10	3"	CPLG	VENT	CENTER	ROOF
11	3"	150# RF.SO.	OUTLET	90°	SHELL
12	2"	CPLG	LEVEL INDICATOR	80°	ROOF
13	3"	150# RF.SO.	RADAR LEVEL	30°	ROOF

3 M201 EXISTING FUEL TANK DETAIL
SCALE: NTS

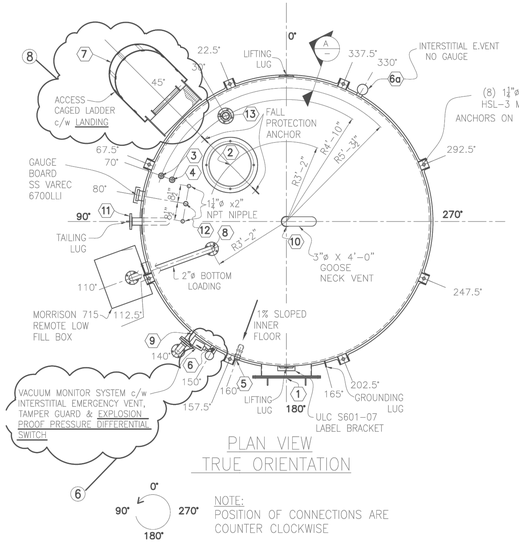

PLAN VIEW
TRUE ORIENTATION

NOTE:
POSITION OF CONNECTIONS ARE COUNTER CLOCKWISE

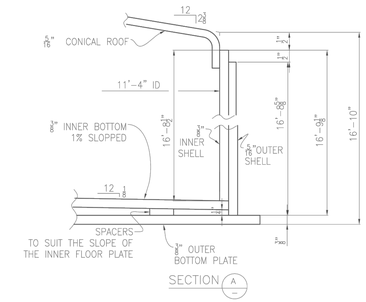

1 M201 EXISTING FUEL TANK DETAIL
SCALE: NTS

SHIPPED LOOSE SCHEDULE

MARK	QTY	DESCRIPTION	REMARKS
1	1	PRESSURE/VACCUUM NORMAL VENT	
2	1	3"x48" VENT PIPE	
3	1	ACCESS LADDER CAGE	
4	1	3" REMOTE FILL	c/w CAMLOCK, DUST CAP, 40L SP311L PREIVENTOR

NOTES:
1. TANK DESIGN, FABRICATION AND TESTING CONFORMS TO ULC-S601 SPECIFICATIONS.
2. TANK PRODUCTION AIR/SOAP LEAK TESTING: 10-20 kPa (1.5-3.0 PSI)
3. DIMENSIONS MAY VARY DUE TO MANUFACTURING TOLERANCES.
4. FITTING AND LUG MEASUREMENTS ARE FROM THE TOP OF THE FLOOR.
5. FLANGE BOLT HOLES TO STRADDLE OR '2-HOLED' TANK VERTICAL CENTERLINES.
6. DECALS: WESTEEL AND UCL STANDARD DECALS ARE APPLIED AS REQUIRED.
7. INT. FINISH: AS WELDED - SWEEP TANK CLEAN.
8. EXT. FINISH: WESTEEL STANDARD WHITE.
9. NORMAL VENT MUST BE INSTALLED PRIOR TO USE.
10. TOUCH-UP PAINT AND GAUGE CHART ARE SHIPPED LOOSE WITH TANK.
11. STANDARD WESTEEL DECALS INSTALLED.

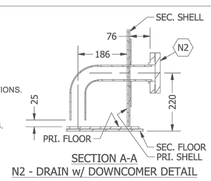

SECTION A-A
N2 - DRAIN w/ DOWNCOMER DETAIL

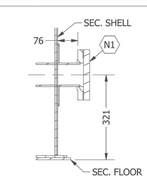

SECTION B-B
N1 - INLET/OUTLET DETAIL

GENERAL ARRANGEMENT SCHEDULE

MARK	QTY	DESCRIPTION	REMARKS
L1	2	VERTICAL LIFT LUG (TOP)	3/4" PL x 6" x 13 3/4" Lg. - 2 1/2"Dia. HOLE - c/w REPAD
L2	1	TAILING LUG (SIDE)	1/2" PL x 5" x 7-1/2" Lg. - 2 1/2"Dia. HOLE - c/w REPAD
L3	1	CONSTRUCTION LUG	1/2" PL x 5" x 7-1/2" Lg. - 2 1/2"Dia. HOLE - c/w REPAD
L4	2	TIE-DOWN LUGS (SIDE)	1/2" PL x 5" x 7-1/2" Lg. - 2 1/2"Dia. HOLE - c/w REPAD
L5	2	GROUNDING LUG	1/4" PL x 3" x 3".
NP	1	NAMEPLATE MOUNT BRACKET	c/w ULC NAMEPLATE INSTALLED
M1	1	24" Dia. SIDE BLL MANHOLE	c/w BOLTED COVER, GARLOCK GASKET, REPAD
N1	2	3" 150# ANSI RF FLANGE - INLET/OUTLET	c/w BLIND FLANGE
N2	1	2" 150# ANSI RF FLANGE - DRAIN	c/w DOWNCOMER, BLIND FLANGE
N3	1	1" NPT - SECONDARY MONITOR	C/W THOMAS 5100 LEAK GAUGE
V1	1	12" PRL EMERGENCY VENT	MORR FLG 2HKOF-0100AV BOZ
V2	1	12" SEC. EMERGENCY VENT	MORR FLG 2HKOF-0100AV BOZ
V3	1	3" NORMAL VENT	VENT: PRESSURE VAC & 48" VENT STACK (SHIPPED LOOSE)
C1	1	4" NPT CPLG - SPARE	c/w M.L. PLUG
C2	2	4" NPT CPLG - SPARE	c/w 4"x2" BSHG, M.L. PLUG
C3	1	6" NPT CPLG - FILL PORT	c/w 3" OVERFILL PREIVENTION VALVE, DROP TUBE, 3" FILL PIPING

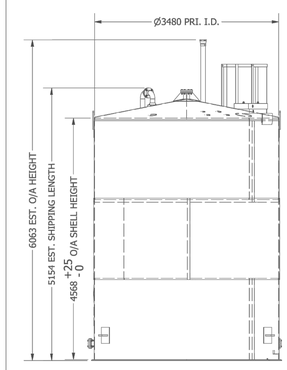

FRONT VIEW

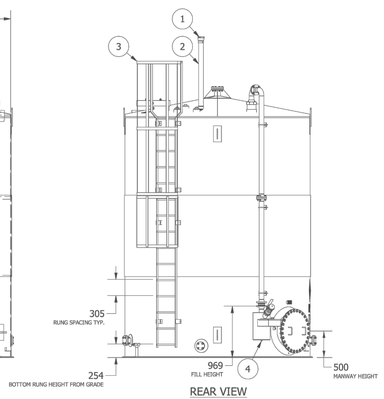

REAR VIEW

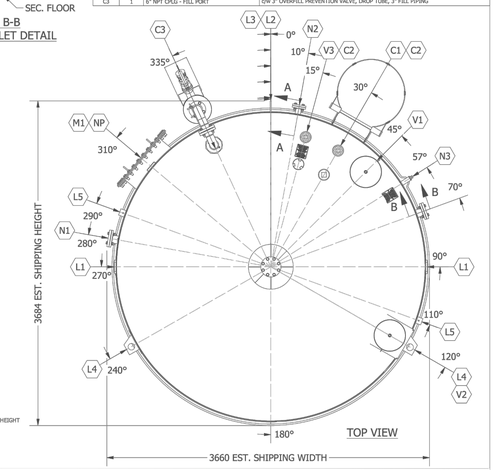

TOP VIEW

TANK SPECIFICATIONS:
FABRICATION CODE: ULC S601
TANK TYPE: VERTICAL DOUBLE WALL
NOMINAL CAPACITY L: 42 00
MATERIAL: CARBON STEEL
MINIMUM PRIMARY MATERIAL THICKNESS (mm): 1/4" (SHELL)
MAX. OPERATING PRESSURE: 7 kPa
MAX. OPERATION VACUUM: 300 Pa
REQUIRED VENTING CAPACITY (m^3/min): 209
*LIFT LUG **NOT** CERTIFIED TO LIFT TANK CONTAINING PRODUCT

2 M201 NEW FUEL TANK DETAIL
SCALE: NTS

Rev	Date	Description	Drawn	Design	App'd
B	2025-06-13	ISSUED FOR DEVELOPMENT PERMIT	MC/SD	MC/SD	IT
A	2025-05-16	ISSUED FOR 100% DEVELOPMENT DESIGN	MC/SD	MC/SD	IT

THE UNIVERSITY OF BRITISH COLUMBIA

ORIGINAL DWG SIZE: A1 (594 x 841mm)

McElhanney
Suite 2300
13450 102nd Avenue
Surrey BC
Canada V3T 5X3
T 604 596 0391

AMEGroup
200 - 638 Smithe St
Vancouver BC, V6B 1E3
T.604-684-5995 amegroup.ca

PRELIMINARY NOT FOR CONSTRUCTION

THIS DRAWING HAS NOT BEEN APPROVED AND MAY CONTAIN ERRORS AND OMISSIONS

THE UNIVERSITY OF BRITISH COLUMBIA
6200 UNIVERSITY BLVD, VANCOUVER, BC V6T 1Z4

UBC SOUTH CAMPUS WORK YARD DETAILS

Drawing No. M201

Project Number 2121-01293-00

Rev. B

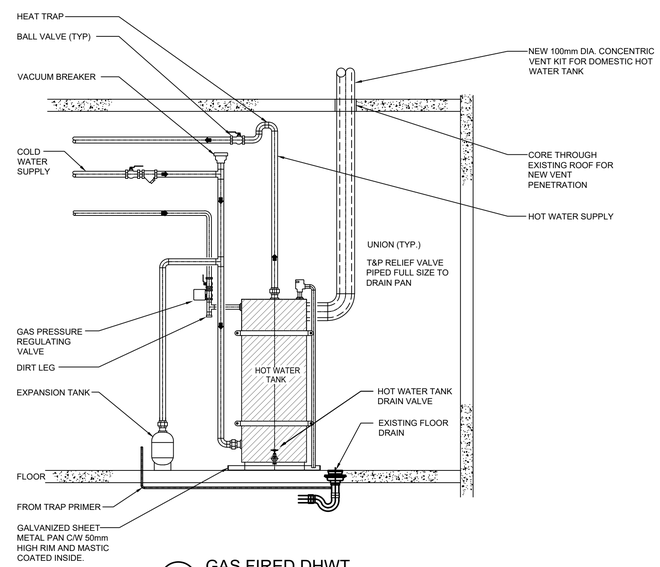

3 M202 GAS FIRED DHWT

SCALE: NTS

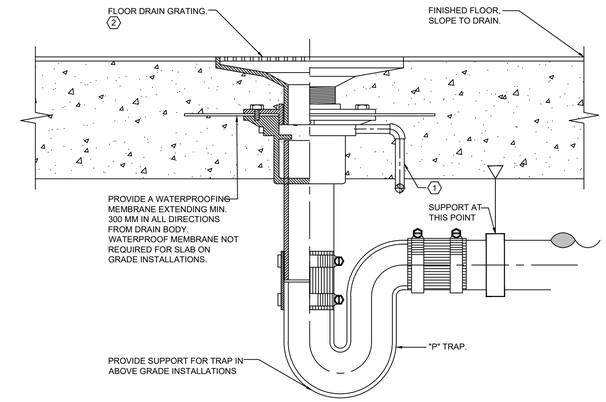

1. 15Ø TRAP PRIMER SUPPLY LINE.
2. REFER TO SPECIFICATIONS ON FLOOR GRATINGS FOR SPECIFIC APPLICATIONS. FOR INSTALLATIONS WHERE SEAMLESS FLOORING IS TO BE USED, A SURFACE MEMBRANE STYLE GRATING IS TO BE USED AND THE INSTALLATION MUST MEET WITH THE APPROVAL OF THE FLOORING CONTRACTOR.

1 M202 FLOOR DRAIN INSTALLATION DETAIL

SCALE: NTS

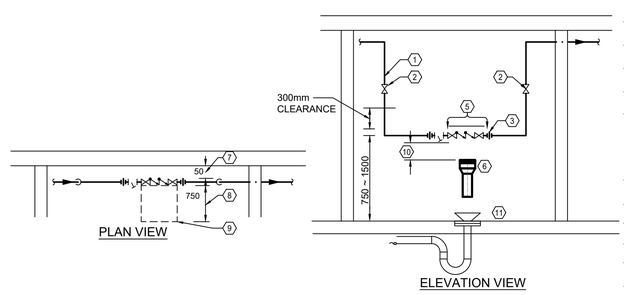

1. DCW SUPPLY LINES REFER TO PLUMBING DRAWING FOR SIZING
2. SHUT-OFF VALVE
3. UNION
4. STRAINER
5. REDUCED PRESSURE BACKFLOW PREVENTER ASSEMBLY (RPBA) OR DOUBLE CHECK VALVE ASSEMBLY (DCVA) MOUNTED ON THE WALL. RPBA's TO BE C/W INDIRECT DRAIN LINE CONNECTION TO HUB DRAIN, REFER TO PLUMBING DRAWING FOR SIZING.
6. HUB DRAIN (HD-1) C/W 75Ø STANDPIPE DRAIN W/ AIR GAP TERMINATION
7. CLEARANCE AT BACK
8. CLEARANCE IN FRONT OF RPBA
9. EXTEND OF CLEARANCE IN FRONT
10. AIR GAP EQUAL TO 2x SUPPLY PIPE DIAMETER. 25MM MIN.
11. FUNNEL FLOOR DRAIN (FFD-1)

4 M202 RPBP AND DCVA INSTALLATION DETAIL

SCALE: NTS

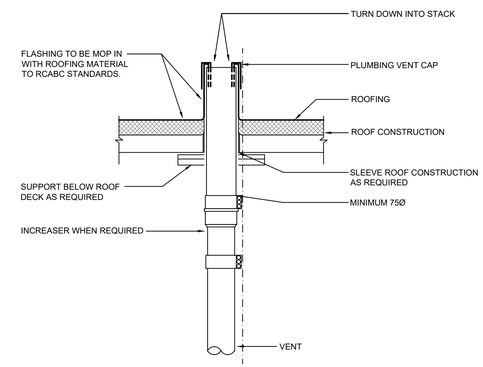

2 M202 PLUMBING VENT THROUGH ROOF

SCALE: NTS

Rev	Date	Description	Drawn	Design	App'd
B	2025-06-13	ISSUED FOR DEVELOPMENT PERMIT	MC/SD	MC/SD	IT
A	2025-05-16	ISSUED FOR 100% DEVELOPMENT DESIGN	MC/SD	MC/SD	IT

THE UNIVERSITY OF BRITISH COLUMBIA

ORIGINAL DWG SIZE: A1 (594 x 841mm)

McElhanney
Suite 2300
13450 102nd Avenue
Surrey BC
Canada V3T 5X3
T 604 596 0391

AMEGroup
200 - 638 Smithe St
Vancouver BC, V6B 1E3
T.604-684-5995 amegroup.ca

PRELIMINARY NOT FOR CONSTRUCTION

THIS DRAWING HAS NOT BEEN APPROVED AND MAY CONTAIN ERRORS AND OMISSIONS

THE UNIVERSITY OF BRITISH COLUMBIA
6200 UNIVERSITY BLVD, VANCOUVER, BC V6T 1Z4

UBC SOUTH CAMPUS WORK YARD DETAILS

Drawing No. M202

Project Number 2121-01293-00

Rev. B

COMMON WORKS

1. GENERAL

1.1 THE UNIVERSITY OF BRITISH COLUMBIA TECHNICAL GUIDELINES

THE UBC TECHNICAL GUIDELINES SERVE AS THE CODE OF QUALITY AND PERFORMANCE FOR THE CONSTRUCTION AND RENOVATION OF UNIVERSITY-OWNED INSTITUTIONAL BUILDINGS. THE UBC TECHNICAL GUIDELINES OUTLINE THE TECHNICAL REQUIREMENTS AND ESTABLISHES THE MINIMUM ACCEPTABLE STANDARDS FOR UBC PROJECTS.

THE UBC TECHNICAL GUIDELINES SHALL BE READ, INTERPRETED AND COORDINATED WITH ALL OTHER PARTS OF THIS SPECIFICATION.

WHERE A UBC TECHNICAL GUIDELINE IS INTERPRETED TO CONFLICT WITH THE PROVISIONS OF THIS SPECIFICATION WITH REGARD TO PRODUCT TYPE THE UBC TECHNICAL GUIDELINES SHALL PREVAIL. WHERE THE UBC TECHNICAL GUIDELINES CONFLICT WITH REGARD TO QUALITY, THE MORE STRINGENT SHALL PREVAIL. WHERE THE UBC TECHNICAL GUIDELINES CONFLICT WITH INDUSTRY STANDARDS, ACTS AND CODES, COMPLIANCE WITH THE STANDARDS, ACTS AND CODES SHALL PREVAIL.

THE CONTRACTOR SHALL BRING THESE CONFLICTS IN WRITING TO THE ATTENTION OF THE OWNER'S CONSULTANT.

1.2 GENERAL SCOPE

'PROVIDE' SHALL MEAN SUPPLY AND INSTALL.

'CONSULTANT' SHALL MEAN AME GROUP CONSULTING PROFESSIONAL ENGINEERS

PROVIDE COMPLETE, FULLY TESTED AND OPERATIONAL SYSTEMS TO MEET THE REQUIREMENTS DESCRIBED HEREIN AND IN COMPLETE ACCORD WITH APPLICABLE CODES AND ORDINANCES.

CONTRACT DOCUMENTS AND DRAWINGS ARE DIAGRAMMATIC. THEY ESTABLISH SCOPE, MATERIAL AND INSTALLATION QUALITY BUT ARE NOT DETAILED INSTALLATION INSTRUCTIONS.

FOLLOW MANUFACTURERS' RECOMMENDED INSTALLATION INSTRUCTIONS, DETAILS AND PROCEDURES FOR EQUIPMENT, SUPPLEMENTED BY REQUIREMENTS OF THE CONTRACT DOCUMENTS.

CLARIFICATIONS OR REQUESTS FOR ALTERNATE MATERIALS OR EQUIPMENT MUST BE SUBMITTED IN WRITING TO THE CONSULTANT NO LATER THAN SEVEN (7) WORKING DAYS PRIOR TO THE MECHANICAL TRADES' CLOSING TENDER DATE. APPROVAL OF REQUESTS SHALL ONLY BE GIVEN BY ADDENDUM.

MAKE REFERENCE TO ELECTRICAL, MECHANICAL, STRUCTURAL AND ARCHITECTURAL DRAWINGS WHEN SETTING OUT WORK. CONSULT WITH RESPECTIVE DIVISIONS IN SETTING OUT LOCATIONS FOR DUCTWORK, EQUIPMENT, AND PIPING, SO THAT CONFLICTS ARE AVOIDED AND SYMMETRICAL EVEN SPACING IS MAINTAINED. JOINTLY WORK OUT ALL CONFLICTS ON SITE BEFORE FABRICATING OR INSTALLING ANY MATERIALS OR EQUIPMENT.

1.3 CODE COMPLIANCE, PERMITS AND FEES

ALL WORK SHALL COMPLY WITH CURRENT EDITIONS OF THE NATIONAL, PROVINCIAL AND MUNICIPAL CODES, STANDARDS, ACTS AND BYLAWS AND WILL MEET THE REQUIREMENTS OF THE AUTHORITY HAVING JURISDICTION.

OBTAIN ALL PERMITS AND PAY ALL FEES APPLICABLE TO THE SCOPE OF WORK. CONTRACTOR SHALL ARRANGE FOR INSPECTIONS OF THE WORK BY THE AUTHORITIES HAVING JURISDICTION AND SHALL PROVIDE CERTIFICATES INDICATING FINAL APPROVAL.

1.4 COMPLIANCE WITH ENERGY CODE

ALL EQUIPMENT INSTALLED ON THIS PROJECT SHALL COMPLY WITH THE NATIONAL ENERGY CODE OF CANADA FOR BUILDINGS - 2020, ASHRAE STANDARD 90.1 - 2019

1.5 TENDER PRICE BREAKDOWN

SUBMIT A TENDER PRICE BREAKDOWN WITHIN THIRTY (30) DAYS OF TENDER CLOSING AND BEFORE FIRST PROGRESS CLAIM, IN A FORMAT AGREED TO WITH THE CONSULTANT. AS A MINIMUM INCLUDE EQUIPMENT, MATERIALS AND LABOUR FOR MECHANICAL, PLUMBING, SHEET METAL, FIRE PROTECTION AND CONTROLS.

1.6 SUBMITTALS

COMPLY WITH DIVISION 1 - SUBMISSION AND CLOSEOUT PROCEDURES AND IN ADDITION THE FOLLOWING:

SHOP DRAWINGS: PROVIDE SHOP DRAWINGS FOR ALL EQUIPMENT AS ELECTRONIC FILES (FILE FORMAT: . PDF, OR COMPARABLE). WHEN MANUFACTURER'S CUT SHEETS APPLY TO A PRODUCT SERIES RATHER THAN A SPECIFIC PRODUCT, THE DATA SPECIFICALLY APPLICABLE TO THE PROJECT SHALL BE HIGHLIGHTED OR CLEARLY INDICATED BY OTHER MEANS. EACH SUBMITTED PIECE OF LITERATURE AND DRAWINGS SHALL CLEARLY REFERENCE THE SPECIFICATION AND/OR DRAWING THAT THE SUBMITTAL IS TO COVER. GENERAL CATALOGS SHALL NOT BE ACCEPTED AS CUT SHEETS TO FULFILL SUBMITTAL REQUIREMENTS.

CLOSEOUT SUBMITTALS: PROVIDE A MINIMUM OF TWO (2) MECHANICAL OPERATION AND MAINTENANCE MANUALS AND ONE DIGITAL COPY, PREPARED BY THE TAB AND MECHANICAL CONTRACTOR.

OPERATION AND MAINTENANCE MANUAL APPROVED BY, AND FINAL COPIES DEPOSITED WITH THE CONSULTANT A MINIMUM OF 7-DAYS BEFORE FINAL INSPECTION.

OPERATION AND MAINTENANCE MANUAL TO INCLUDE BUT NOT LIMITED TO: LAYMAN'S DESCRIPTION OF THE SYSTEMS AND ASSOCIATED CONTROLS; OPERATIONAL INSTRUCTIONS, SERVICING, MAINTENANCE, OPERATION AND TROUBLE-SHOOTING INSTRUCTIONS FOR EACH ITEM OF EQUIPMENT; WARRANTIES; EQUIPMENT MANUFACTURER'S PERFORMANCE DATASHEETS INDICATING POINT OF OPERATION AS LEFT AFTER COMMISSIONING IS COMPLETE; TESTING, ADJUSTING AND BALANCING REPORTS.

SITE RECORDS: CONTRACTOR SHALL MAINTAIN 1 SET OF WHITE PRINTS AT CONTRACTORS COST TO MARK CHANGES AS WORK PROGRESSES AND AS CHANGES OCCUR. USE DIFFERENT COLOUR WATERPROOF INK FOR EACH SERVICE. DO NOT USE PENCIL OR BLACK INK. TRANSFER INFORMATION WEEKLY TO SHOW WORK AS ACTUALLY INSTALLED. DRAWINGS SHALL BE AVAILABLE FOR REFERENCE PURPOSES AND REVIEW.

RECORD DRAWINGS: PRIOR TO START OF TESTING, ADJUSTING AND BALANCING FOR MECHANICAL FINALIZE PRODUCTION OF RECORD DRAWINGS

RECORD DRAWINGS: USE FINAL SITE RECORD TO ELECTRONICALLY PRODUCE CAD AND PDF FILES THUS FORMING A “RECORD DRAWING” SET. IDENTIFY EACH DRAWING IN LOWER RIGHT HAND CORNER IN LETTERS AT LEAST 12 MM HIGH AS FOLLOWS: - "RECORD DRAWINGS: THIS DRAWING HAS BEEN REVISED TO SHOW MECHANICAL SYSTEMS AS INSTALLED" (SIGNATURE OF CONTRACTOR) (DATE). PERFORM TESTING, ADJUSTING AND BALANCING FOR HVAC USING RECORD DRAWINGS. SUBMIT RECORD DRAWINGS TO CONSULTANT FOR APPROVAL AND MAKE CORRECTIONS AS DIRECTED. PERFORM TESTING, ADJUSTING, AND BALANCING FOR HVAC USING RECORD DRAWINGS. PROVIDE COMPLETED REPRODUCIBLE RECORD DRAWINGS WITH FINAL OPERATING AND MAINTENANCE MANUALS WITHIN TWO (2) WEEKS OF SUBSTANTIAL COMPLETION. FAILURE TO SUBMIT DRAWINGS WILL RESULT IN THE WORK BEING UNDERTAKEN BY THE OWNER AND DEDUCTED FROM THE CONTRACTOR'S DEFICIENCY HOLD BACK AMOUNT. COST TO TRANSFER RECORD INFORMATION ONTO REPRODUCIBLE MEDIA & AUTO-CAD OR REVIT ARE THIS CONTRACTOR'S RESPONSIBILITY. CONSULTANT WILL RELEASE CAD DRAWINGS TO CONTRACTOR AFTER SIGNING A COPYRIGHT FORM. SHOULD THE CONTRACTOR CHOOSE TO UTILIZE THIS CONSULTANT FOR TRANSFERRING AS BUILT INFORMATION TO RECORD DRAWINGS, ALLOW $400 / SHEET FOR ALL DRAWINGS IN THE CONSTRUCTION SET. THIS WILL COVER COSTS FOR DRAFTING TIME & PRINTING COSTS.

1.7 QUALITY OF WORK

ALL WORK SHALL BE BY QUALIFIED TRADESMEN WITH VALID PROVINCIAL TRADE QUALIFICATION CERTIFICATES. SPOT CHECKS WILL BE MADE BY THE CONSULTANT. WORK WHICH DOES NOT CONFORM TO STANDARDS MAY BE REJECTED BY THE CONSULTANT. THE CONTRACTOR SHALL REDO REJECTED WORK TO THE ACCEPTED STANDARD AT NO COST TO THE OWNER.

1.8 METRIC CONVERSION

ALL UNITS ARE EXPRESSED IN SI UNITS. ON ALL SUBMITTALS (SHOP DRAWINGS ETC.) USE THE SAME SI UNITS AS STATED IN THE SPECIFICATION.

WHERE PIPES ARE SPECIFIED WITH METRIC DIMENSIONS AND IMPERIAL SIZED PIPES ARE AVAILABLE, PROVIDE EQUIVALENT NOMINAL IMPERIAL SIZED PIPE AS INDICATED IN THE TABLE, AND PROVIDE AT NO EXTRA COST ADAPTERS TO ENSURE COMPATIBLE CONNECTIONS TO ALL METRIC SIZED FITTINGS, EQUIPMENT AND PIPING.

WHEN CSA APPROVED SI METRIC PIPES ARE PROVIDED, THE CONTRACTOR SHALL PROVIDE AT NO EXTRA COST ADAPTERS TO ENSURE COMPATIBLE CONNECTIONS BETWEEN THE SI METRIC PIPES AND ALL NEW AND EXISTING PIPES, FITTINGS, AND EQUIPMENT.

EQUIVALENT NOMINAL DIAMETER OF PIPES

15MM = NPS ½

20MM = NPS ¾

25MM = NPS 1

30MM = NPS 1-1/4

40MM = NPS 1-1/2

50MM = NPS 2

65MM = NPS 2-1/2

75MM = NPS 3

100MM = NPS 4

1.9 DRAWINGS AND SPECIFICATIONS

SHOULD ANY DISCREPANCY APPEAR BETWEEN DRAWINGS AND SPECIFICATIONS OBTAIN WRITTEN CLARIFICATION FROM THE CONSULTANT DURING THE TENDER PERIOD. WITHOUT A WRITTEN CLARIFICATION THE BETTER QUALITY AND/OR GREATER QUANTITY OF WORK OR MATERIALS SHALL BE ESTIMATED, PERFORMED AND FURNISHED WITHIN THE TENDERED PRICE.

1.10 CUTTING, PATCHING AND CORING

PROVIDE HOLES AND SLEEVES, CUTTING AND FITTING REQUIRED FOR MECHANICAL WORK. RELOCATE IMPROPERLY LOCATED HOLES AND SLEEVES. ALL WORK SHALL BE COORDINATED WITH OTHER TRADES.

OBTAIN WRITTEN APPROVAL FROM THE STRUCTURAL CONSULTANT BEFORE CUTTING OR BURNING STRUCTURAL MEMBERS.

PROVIDE X-RAY OF ALL REQUIRED PENETRATIONS OF THE FLOOR. X-RAY USE FOR LOCATING IN FLOOR REBAR AND CONDUIT TO BE DONE AFTER NORMAL WORKING HOURS. TAKE NECESSARY PRECAUTIONS TO PROTECT COMPUTER EQUIPMENT WHEN X-RAYING FLOORS. COORDINATE WITH OWNER.

1.11 INSTALLATION OF EQUIPMENT

PIPE ALL EQUIPMENT DRAINS TO BUILDING DRAINS EXCEPT SYSTEMS CONTAINING GLYCOL.

UNIONS AND FLANGES SHALL BE PROVIDED IN PIPING OR DUCTWORK TO PERMIT EASY REMOVAL OF EQUIPMENT.

MAINTAIN PERMANENT ACCESS TO EQUIPMENT FOR MAINTENANCE.

1.12 CONNECTIONS TO EXISTING SERVICES

MAINTAIN LIAISON WITH THE OWNER AND PROVIDE A MUTUALLY ACCEPTABLE SCHEDULE TO INTERRUPT, REROUTE, OR CONNECT TO EXISTING BUILDING SERVICES WITH THE MINIMUM OF INTERRUPTION OF THOSE SERVICES.

1.13 SELECTIVE DEMOLITION

REMOVE FROM SITE ALL EQUIPMENT, DUCTING OR PIPING WHICH IS NO LONGER REQUIRED BECAUSE OF WORK UNDER THIS CONTRACT. EXCEPT AS OTHERWISE STATED, SALVAGEABLE MATERIALS FROM AREA OF DEMOLITION SHALL BECOME THE PROPERTY OF THE OWNER AT HIS DISCRETION.

THE INTENT IS FOR A HAZ-MAT CONTRACTOR TO REMOVE ALL ASBESTOS CONTAINING MATERIAL PRIOR TO THE PROPOSED PROJECT WORK TAKING PLACE. NOTIFY THE CONSULTANT IF ASBESTOS CONTAINING MATERIAL IS SUSPECTED TO REMAIN ON SITE.

1.14 EQUIPMENT AND MATERIALS

WHERE TWO OR MORE PRODUCTS OF THE SAME TYPE ARE REQUIRED, PRODUCTS SHALL BE OF THE SAME MANUFACTURER.

NOTIFY THE CONSULTANT IN WRITING TEN (10) DAYS PRIOR TO THE TENDER CLOSE, ANY MATERIALS OR EQUIPMENT SPECIFIED WHICH IS NOT CURRENTLY AVAILABLE OR WILL NOT BE AVAILABLE FOR USE AS CALLED FOR HEREIN. FAILING THIS, THE CONTRACT WILL ASSUME THAT THE MOST EXPENSIVE ALTERNATE HAS BEEN INCLUDED IN THE TENDER PRICE.

APPROVED EQUIVALENTS AND/OR ALTERNATIVES TO SPECIFIED PRODUCTS SHALL BE EQUAL TO THE SPECIFIED PRODUCT IN EVERY RESPECT, OPERATE AS INTENDED, AND MEET THE SPACE, CAPACITY, AND NOISE REQUIREMENTS OUTLINED.

THE CONTRACTOR SHALL BE FULLY RESPONSIBLE FOR ANY ADDITIONAL LABOUR AND MATERIALS REQUIRED BY ANY TRADES OR OTHER CONTRACTORS TO ACCOMMODATE THE USE OF OTHER THAN SPECIFIED MATERIALS OR EQUIPMENT. THE CONTRACTOR SHALL BEAR ANY AND ALL COSTS FOR DESIGN/SYSTEM MODIFICATIONS TO ACCOMMODATE THE “ALTERNATE” EQUIPMENT. EXTRAS WILL NOT BE APPROVED TO COVER SUCH WORK.

1.15 DELIVERY, STORAGE AND HANDLING

STORE MATERIALS AND EQUIPMENT IN ACCORDANCE WITH THE MANUFACTURER'S RECOMMENDATIONS IN A CLEAN, DRY, WELL-VENTILATED AREA.

REPLACE DEFECTIVE OR DAMAGED MATERIALS WITH NEW.

1.16 FIRESTOPPING AND SMOKE SEALS

PROVIDE FIRESTOPPING SYSTEM(S) TO PROVIDE AND MAINTAIN A FIRE RESISTANCE RATING, AS INDICATED ON DRAWINGS AND IN ACCORDANCE WITH UL, WH, ULC, CUL OR FM DESIGN DETAILS FOR ALL MECHANICAL WORK IN DIVISIONS 21, 22, 23 AND 25

SOUND TRANSMISSION COEFFICIENT (STC) RATINGS TESTED TO ASTM E90-09 TO ACHIEVE STC RATINGS AS REQUIRED BY ARCHITECTURAL DRAWINGS.

ALL FIRESTOP SYSTEM INSTALLATIONS MUST MEET THE REQUIREMENTS OF CAN4-S115-M OR ULC S-115-M TESTED ASSEMBLIES THAT PROVIDE A FIRE RATING. PROPOSED FIRESTOP MATERIALS AND METHODS SHALL CONFORM TO APPLICABLE GOVERNING CODES HAVING LOCAL JURISDICTION.

A MANUFACTURER'S DIRECT REPRESENTATIVE (NOT DISTRIBUTOR OR AGENT) SHALL BE ON-SITE DURING THE INITIAL INSTALLATION OF FIRESTOP SYSTEMS TO TRAIN APPROPRIATE CONTRACTOR PERSONNEL IN CORRECT SELECTION AND INSTALLATION PROCEDURES. THIS WILL BE DONE PER MANUFACTURER'S WRITTEN RECOMMENDATIONS PUBLISHED IN THEIR LITERATURE AND DRAWING DETAILS.

RETAIN AND PAY FOR THE SERVICE OF A PROFESSIONAL ENGINEER REGISTERED IN THE PROVINCE OF BRITISH COLUMBIA TO INSPECT EACH AND EVERY MECHANICAL FIRESTOPPING INSTALLATION, AND AS REQUIRED BY THE AUTHORITY HAVING JURISDICTION, AND PROVIDE A REPORT ON ALL INSTALLATIONS. THE FIRESTOPPING ENGINEER SHALL PROVIDE LETTERS OF ASSURANCE TO THE OWNER'S CONSULTANT, IN ACCORDANCE WITH THE BC BUILDING CODE.

FOR THOSE FIRESTOP APPLICATIONS THAT EXIST FOR WHICH NO ULC OR CUL TESTED SYSTEM IS AVAILABLE THROUGH A MANUFACTURER, A MANUFACTURER'S ENGINEERING JUDGMENT DERIVED FROM SIMILAR ULC OR CUL SYSTEM DESIGNS OR OTHER TESTS WILL BE SUBMITTED TO LOCAL AUTHORITIES HAVING JURISDICTION FOR THEIR REVIEW AND APPROVAL PRIOR TO INSTALLATION. ENGINEER JUDGMENT DRAWINGS MUST FOLLOW REQUIREMENTS SET FORTH BY THE INTERNATIONAL FIRESTOP COUNCIL AND THE AUTHORITIES HAVING JURISDICTION AND BE SEALED BY A PROFESSIONAL ENGINEER REGISTERED IN THE PROVINCE OF BRITISH COLUMBIA.

SUBMIT SHOP DRAWINGS OF ALL FIRESTOPPING SYSTEMS UNDER THIS SCOPE OF WORK. INCLUDE A SUMMARY OF ALL FIRESTOP SYSTEMS INCLUDED IN THE SUBMITTAL. INDICATE PENETRATING MATERIAL, WALL OR FLOOR CONSTRUCTION AND RATING, FIRESTOPPING ASSEMBLY.

1.17 ESCUTCHEONS AND PLATES

PROVIDE ESCUTCHEONS AND PLATES ON ALL PIPING AND DUCTWORK PASSING THROUGH FINISHED WALLS, FLOORS, AND CEILINGS.

1.18 GUARANTEE / WARRANTY

FURNISH A WRITTEN GUARANTEE STATING THAT ALL WORK EXECUTED IN THIS CONTRACT WILL BE FREE FROM DEFECTIVE WORKMANSHIP AND MATERIALS FOR A PERIOD OF ONE (1) YEAR FROM THE DATE OF SUBSTANTIAL PERFORMANCE.

1.19 BALANCING

THE APPROVED BALANCING AGENCIES ARE: WESTERN MECHANICAL; K.D. ENGINEERING, FLOTECH MECHANICAL, BLUE COLLAR GROUP, MDT SYSTEMS, RAIN CITY TECHNICAL SERVICES, NOVA GREEN, KANE, CRANBERRY TECHINCAL SERVICES.

BALANCE EQUIPMENT QUANTITIES INDICATED ON THE DRAWINGS AND IN THIS SPECIFICATION. SUBMIT A PDF COPY OF THE REPORT TO THE CONSULTANT WITHIN TWO (2) WEEKS AFTER SUBSTANTIAL COMPLETION. FAILURE TO SUBMIT THE REPORT WITHIN THE SPECIFIED TIME WILL RESULT IN THE WORK BEING DONE BY THE OWNER AND THE COSTS DEDUCTED FROM FINAL PAYMENT.

BALANCING SHALL BE PERFORMED TO THE FOLLOWING:

PUMPS AND CENTRAL EQUIPMENT ±5%

PROVIDE A DROP TEST OF ALL FIRE DAMPERS AND A LETTER/CERTIFICATE CONFIRMING THIS WORK.

COOPERATE WITH THE BALANCING AGENCY AND MAKE ANY CORRECTIONS AS REQUIRED BY BALANCING AGENCY.

PROVIDE BALANCING VALVES AS REQUESTED BY THE BALANCING AGENCY AND/OR NECESSARY TO PROPERLY ADJUST OR CORRECT THE SYSTEMS TO DESIGN FLOWS, WITHOUT ADDITIONAL COST TO OWNER.

1.20 COMMISSIONING AND DEMONSTRATION

ENGAGE IN A COMMISSIONING AGENT CXA

BE RESPONSIBLE FOR THE PERFORMANCE AND COMMISSIONING OF ALL EQUIPMENT SUPPLIED AND RE-USED UNDER DIVISIONS 22 AND 23].

CONFIRM OPERATION AND REVIEW CONDITION OF ALL EXISTING MECHANICAL EQUIPMENT[AND ASSOCIATED CONTROL DEVICES IN THE RENOVATED AREA. SUBMIT REPORT NOTING ANY REMEDIAL WORK REQUIRED.

AT THE CONCLUSION OF COMMISSIONING, DEMONSTRATE THE OPERATION OF THE SYSTEMS TO THE CONSULTANT AND THEN TO THE OWNER'S OPERATING STAFF.

AT THE COMPLETION OF THE COMMISSIONING, TESTING, BALANCING AND DEMONSTRATION SUBMIT TO THE CONSULTANT A LETTER CERTIFYING THAT ALL WORK SPECIFIED UNDER THIS CONTRACT IS COMPLETE, CLEAN AND OPERATIONAL IN ACCORDANCE WITH THE SPECIFICATION AND DRAWINGS.

1.21 SEISMIC CONTROL

PROVIDE SEISMIC RESTRAINTS FOR ALL REQUIRED EQUIPMENT, PIPING, AND DUCTWORK IN ACCORDANCE WITH THE LATEST EDITION OF THE SEISMIC RESTRAINTS MANUAL FOR MECHANICAL SYSTEMS PRODUCED BY SMACNA, AND THE LATEST EDITION OF THE ASHRAE APPLICATION HANDBOOK CHAPTER 49, SEISMIC RESTRAINTS.

THE CONTRACTOR SHALL RETAIN THE SERVICES OF A QUALIFIED PROFESSIONAL SEISMIC ENGINEER (SEISMIC ENGINEER) REGISTERED IN THE PROVINCE OF BRITISH COLUMBIA. THE SEISMIC ENGINEER SHALL DESIGN AND REVIEW THE INSTALLATION OF ALL SEISMIC RESTRAINTS AS WELL AS MECHANICAL EQUIPMENT AND MECHANICAL SYSTEM SUPPORTS. THE RESTRAINTS AND SUPPORTS SHALL BE SPECIFICALLY DESIGNED TO FASTEN TO THE STRUCTURE INDICATED IN THE CONTRACT DOCUMENTS AND INSTALLED IN THE FIELD. THE COMPLETE DESIGN FOR THESE SYSTEMS SHALL COMPLY WITH ALL APPLICABLE BUILDING CODE REQUIREMENTS.

SEISMIC ENGINEER SHALL PROVIDE AND SUBMIT TO THE OWNER'S CONSULTANT ASSURANCE OF PROFESSIONAL DESIGN AND COMMITMENT FOR FIELD REVIEW SCHEDULE S-B AND ASSURANCE OF PROFESSIONAL FIELD REVIEW AND COMPLIANCE SCHEDULE S-C FOR SEISMIC ENGINEERING.

SUBMIT SHOP DRAWINGS OF ALL SEISMIC RESTRAINT DETAILS PREPARED AND SEALED BY THE SEISMIC ENGINEER. PRIOR TO SUBSTANTIAL COMPLETION, THE SEISMIC ENGINEER SHALL VISIT THE SITE AND VERIFY THE SEISMIC RESTRAINT INSTALLATION AS REQUIRED TO SATISFY THE ASSURANCE OF PROFESSIONAL FIELD REVIEW

THE CONTRACTOR SHALL OBTAIN APPROVAL FOR THE LOCATION OF ALL RESTRAINT FIXING POINTS FROM THE STRUCTURAL ENGINEER, ON SITE, PRIOR TO INSTALLATION.

WHERE EQUIPMENT IS MOUNTED ON SPRING OR RESILIENT MOUNTS FOR VIBRATION ISOLATION IT SHALL BE THE RESPONSIBILITY OF THE MANUFACTURER OF THE MOUNT TO INCORPORATE SEISMIC RESTRAINT. PROVIDE STEEL FRAME BASES WHERE NECESSARY TO ACHIEVE THIS AND ALSO AVOID OVERTURNING. THE MANUFACTURER SHALL SUPPLY CERTIFICATES, SIGNED BY A PROFESSIONAL ENGINEER REGISTERED WITHIN THE JURISDICTION, VERIFYING THE DESIGN OF THE SEISMIC RESTRAINTS IS IN ACCORDANCE WITH THIS SECTION.

1.22 VIBRATION ISOLATION

PROVIDE NEOPRENE ISOLATORS FOR DEFLECTIONS 6MM (1/4”) AND UNDER.

PROVIDE EITHER NEOPRENE OR STEEL SPRING ISOLATORS FOR DEFLECTIONS BETWEEN 6MM AND 12MM (½”).

PROVIDE STEEL SPRING ISOLATORS FOR DEFLECTIONS OF 12MM (½”) AND OVER.

PROVIDE ADJUSTABLE LIMIT STOPS FOR SPRING ISOLATION MOUNTS ON EQUIPMENT WITH OPERATING WEIGHTS SUBSTANTIALLY DIFFERENT FROM THE INSTALLED WEIGHTS

ALL SPRING ISOLATORS SHALL BE “OPEN SPRING” UNLESS OTHERWISE STATED. SEISMICALLY RATED HOUSED SPRING ISOLATORS MAY BE USED IN LIEU PROVIDED THAT THEY MEET THIS PROJECT'S REQUIREMENTS FOR SEISMIC RESTRAINT.

SELECT ISOLATORS IN ACCORDANCE WITH EQUIPMENT WEIGHT DISTRIBUTION TO ALLOW FOR AN AVERAGE DEFLECTION MEETING OR EXCEEDING THE SPECIFIED DEFLECTION REQUIREMENTS AND SO THAT NO ISOLATOR HAS A DEFLECTION LESS THAN 80% OF THE STATIC DEFLECTION SPECIFIED. A MINIMUM OF 4 ISOLATORS ARE REQUIRED FOR EACH PIECE OF EQUIPMENT, UNLESS SPECIFIED OTHERWISE.

1.23 SUBSTANTIAL AND TOTAL PERFORMANCE

PRIOR TO REQUESTING AN INSPECTION FOR SUBSTANTIAL PERFORMANCE, PROVIDE A COMPLETE LIST OF ITEMS, WHICH ARE DEFICIENT.

A CERTIFICATE OF SUBSTANTIAL PERFORMANCE WILL NOT BE GRANTED UNLESS THE FOLLOWING ITEMS ARE COMPLETED AND AVAILABLE TO THE OWNER'S CONSULTANT:

FINAL PLUMBING INSPECTION CERTIFICATE FROM THE AUTHORITY HAVING JURISDICTION.

FINAL GAS INSPECTION CERTIFICATE FROM THE AUTHORITY HAVING JURISDICTION.

SCHEDULE S-B & S-C FOR SEISMIC ENGINEERING.

FINAL BACKFLOW PREVENTION TEST REPORTS FOR ALL BACKFLOW DEVICES.

DRAFT OPERATING/MAINTENANCE MANUALS HAVE BEEN SUBMITTED FOR REVIEW.

ALL MECHANICAL SYSTEMS HAVE BEEN COMMISSIONED AND ARE CAPABLE OF OPERATION WITH ALARM CONTROLS FUNCTIONAL AND AUTOMATIC CONTROLS IN OPERATION.

WATER SYSTEMS HAVE BEEN BALANCED WITH DRAFT REPORT SUBMITTED TO THE CONSULTANT.

OPERATING AND MAINTENANCE DEMONSTRATIONS HAVE BEEN PROVIDED TO THE OWNER.

RECORD DRAWINGS HAVE BEEN SUBMITTED.

ALL PREVIOUSLY IDENTIFIED DEFICIENCIES HAVE BEEN CORRECTED AND ACCEPTED.

PRIOR TO A TOTAL PERFORMANCE INSPECTION PROVIDE DECLARATION IN WRITING THAT SUBSTANTIAL PERFORMANCE DEFICIENCIES HAVE BEEN CORRECTED AND FINAL TAB REPORTS AND O&M MANUALS HAVE BEEN SUBMITTED.

THE CONSULTANT SHALL PROVIDE ONE (1) VISITATION FOR THE PURPOSE OF TOTAL PERFORMANCE INSPECTION. SUBSEQUENT VISITATIONS IF REQUIRED SHALL BE AT THE EXPENSE OF THE CONTRACTOR.

2. PRODUCTS

2.1 ACCEPTABLE MANUFACTURERS

LISTED MANUFACTURERS ARE ACCEPTABLE FOR THEIR ABILITY TO MEET THE GENERAL DESIGN INTENT, QUALITY AND PERFORMANCE CHARACTERISTICS OF THE SPECIFIED PRODUCT. THE LIST DOES NOT ENDORSE THE ACCEPTABILITY OF ALL PRODUCTS AVAILABLE FROM THE LISTED MANUFACTURERS/SUPPLIERS.

IT REMAINS THE RESPONSIBILITY OF THE CONTRACTOR TO ENSURE THE PRODUCTS SUPPLIED ARE EQUAL TO THE SPECIFIED PRODUCTS IN EVERY RESPECT, OPERATE AS INTENDED, AND MEET THE PERFORMANCE SPECIFICATIONS AND PHYSICAL DIMENSIONS OF THE SPECIFIED PRODUCT.

THE CONTRACTOR SHALL BE FULLY RESPONSIBLE FOR ANY ADDITIONAL WORK OR MATERIALS, TO ACCOMMODATE THE USE OF EQUIPMENT FROM THE ACCEPTABLE MANUFACTURERS AND SUPPLIERS LISTED.

2.2 FIRESTOPPING AND SMOKE SEALS

USE THE SAME MANUFACTURER THROUGHOUT THE PROJECT AND COMPATIBLE MATERIALS FOR RESTORATION WORK.

PROVIDE FILL MATERIAL COMPONENTS FOR EACH FIRESTOPPING SYSTEM AS NEEDED. USE ONLY COMPONENTS SPECIFIED BY THE FIRESTOPPING MANUFACTURER FOR THE DESIGNATED FIRE-RESISTANCE-RATED SYSTEMS.

ACCEPTABLE PRODUCT LISTED IN THE ULC FIRE RESISTANCE DIRECTORY - VOLUME III OR UL PRODUCTS CERTIFIED FOR CANADA (CUL) DIRECTORY.

ACCEPTABLE MANUFACTURERS: 3M, HILTI, AD FIREBARRIER, TREMCO

2.3 PIPE HANGERS AND SUPPORTS

PROVIDE HANGERS AND SUPPORTS TO SECURE EQUIPMENT IN PLACE, PREVENT VIBRATION, PROTECT AGAINST DAMAGE FROM EARTHQUAKE, MAINTAIN GRADE, PROVIDE FOR EXPANSION AND CONTRACTION, AND ACCOMMODATE INSULATION.

PROVIDE GALVANIZED HANGERS AND SUPPORTS FOR ALL PIPING EXCEPT HANGERS AND SUPPORTS SHALL BE COPPER PLATED OR EPOXY COATED FOR COPPER PIPING.

TOGGLE HANGERS AND/OR STRAP HANGERS SHALL NOT BE USED FOR PIPE HANGERS.

POWER ACTUATED FASTENERS AND “DROP-IN” ANCHORS SHALL NOT BE USED.

PROVIDE RING TYPE HANGERS FOR PIPING UP TO NPS 1½ AND CLEVIS TYPE HANGERS FOR PIPING OVER NPS 1½.

2.4 IDENTIFICATION

REFER TO UBC TECHNICAL GUIDELINES FOR IDENTIFICATION REQUIREMENTS.

IDENTIFY PIPING WITH LABELS AND FLOW ARROWS. PROVIDE IDENTIFICATION AT 15M (50FT) MAXIMUM INTERVALS, BEFORE AND AFTER PIPES PASSING THROUGH WALLS, AT ALL SIDES OF TEES, BEHIND ACCESS DOORS. USE BRADY B-500 VINYL CLOTH LABELS FOR NON INSULATED PIPES AND B-350 FOR INSULATED PIPES.

PROVIDE 20MM (3/4”) DIAMETER BRASS TAGS, SECURE TO VALVE STEMS WITH KEY CHAIN. PROVIDE A VALVE DIRECTORY AT ALL MECHANICAL ROOMS, IN THE O&M MANUALS AND A DIGITAL COPY CROSS REFERENCED WITH ANY ASSOCIATED CONTROLS NOMENCLATURE.

EACH PIECE OF EQUIPMENT SHALL BE IDENTIFIED WITH ITS EQUIPMENT SCHEDULE IDENTIFICATION, E.G. SUPPLY FAN SF-1, COOLING COIL CC-1, PUMP P-1 WITH LAMACOID PLATES HAVING 6MM (1/4”) MINIMUM LETTER SIZE.

ACCEPTABLE MANUFACTURERS: BRADY

2.5 SEISMIC CABLE RESTRAINTS

GALVANIZED STEEL AIRCRAFT CABLES SIZED TO RESIST SEISMIC LOADS WITH A MINIMUM SAFETY FACTOR OF TWO AND ARRANGED TO PROVIDE ALL-DIRECTIONAL RESTRAINT.

CABLES MUST BE PRE-STRETCHED TO ACHIEVE A CERTIFIED MINIMUM MODULUS OF ELASTICITY. CABLE END CONNECTIONS SHALL BE STEEL ASSEMBLIES THAT SWIVEL TO FINAL INSTALLATION ANGLE AND UTILIZE TWO CLAMPING BOLTS TO PROVIDE PROPER CABLE ENGAGEMENT.

2.6 VIBRATION ISOLATION

NEOPRENE WASHER/BUSHING: A ONE PIECE MOLDED BRIDGE BEARING NEOPRENE WASHER/BUSHING. THE BUSHING SHALL SURROUND THE ANCHOR BOLT AND HAVE A FLAT WASHER FACE TO AVOID METAL TO METAL CONTACT. USE WASHER/BUSHING ONLY ON LIGHT-WEIGHT EQUIPMENT.

ACCEPTABLE MANUFACTURER: MASON HG HEMI GROMMET OR EQUAL

NEOPRENE PAD ISOLATORS: NEOPRENE OR NEOPRENE / STEEL / NEOPRENE PAD ISOLATORS. MINIMUM STATIC DEFLECTION 2.5 MM (0.1") OR GREATER.

ACCEPTABLE MANUFACTURER: MASON WMSW OR EQUAL

RUBBER FLOOR MOUNTS: BRIDGE BEARING NEOPRENE MOUNTINGS. MINIMUM STATIC DEFLECTION OF 5MM (0.2") OR GREATER AND ALL DIRECTIONAL SEISMIC CAPABILITY.

ACCEPTABLE MANUFACTURER: MASON RAA OR ND OR EQUAL

SPRING FLOOR MOUNTS: SPRING ISOLATORS BUILT INTO A DUCTILE IRON OR STEEL HOUSING TO PROVIDE ALL DIRECTIONAL SEISMIC SNUBBING. THE SNUBBER SHALL BE ADJUSTABLE VERTICALLY AND ALLOW A MAXIMUM OF 6MM (1/4") TRAVEL IN ALL DIRECTIONS BEFORE CONTACTING THE RESILIENT SNUBBING COLLARS. MOLDED NEOPRENE CUP OR 1/4" (6MM) NEOPRENE ACOUSTICAL FRICTION PAD BETWEEN THE BASEPLATE AND THE SUPPORT. SPRING DIAMETERS SHALL BE NO LESS THAN 0.8 OF THE COMPRESSED HEIGHT OF THE SPRING AT RATED LOAD. SPRINGS SHALL HAVE A MINIMUM ADDITIONAL TRAVEL TO SOLID EQUAL TO 50% OF THE RATED DEFLECTION.

ACCEPTABLE MANUFACTURER: MASON SSLFH OR EQUAL

SPRING HANGERS: HANGERS SHALL CONSIST OF RIGID STEEL FRAMES CONTAINING MINIMUM 32MM (1 1/4") THICK NEOPRENE ELEMENTS AT THE TOP AND A STEEL SPRING SEATED IN A STEEL WASHER REINFORCED NEOPRENE CUP ON THE BOTTOM. PROVIDE A COMBINATION RUBBER AND STEEL REBOUND WASHER AS THE SEISMIC UPSTOP FOR SUSPENDED PIPING, DUCTWORK AND EQUIPMENT. RUBBER THICKNESS SHALL BE A MINIMUM OF 6MM (1/4"). COLOUR CODED SPRINGS, RUST RESISTANT, PAINTED BOX TYPE HANGERS. TO MAINTAIN STABILITY THE BOXES SHALL NOT BE ARTICULATED AS CLEVIS HANGERS NOR THE NEOPRENE ELEMENT STACKED ON TOP OF THE SPRING.

ACCEPTABLE MANUFACTURER: MASON HD, HS OR EQUAL

ALTERNATE VIBRATION ISOLATION ACCEPTABLE MANUFACTURERS, KORFUND, VIBRO-ACOUSTICS

3. EXECUTION

3.1 DEMOLITION

ALL CORING, PATCHING AND REMOVAL OF EXISTING EQUIPMENT, PIPES, AND DUCTWORK, WHICH MAY AFFECT THE OPERATION OF OCCUPIED AREAS OF THE BUILDING, SHALL BE CARRIED OUT OUTSIDE OF REGULAR OFFICE HOURS OR AS SCHEDULED WITH THE OWNER.

3.2 PAINTING REPAIRS AND RESTORATION

DO PAINTING IN ACCORDANCE WITH DIVISION 09 - INTERIOR PAINTING. PRIME AND TOUCH UP MARRED FINISHED PAINTWORK TO MATCH ORIGINAL. RESTORE TO NEW CONDITION, FINISHES WHICH HAVE BEEN DAMAGED.

CLEAN EXPOSED BARE METAL SURFACES SUPPLIED UNDER DIVISIONS 21, 22, 23 AND 25. APPLY AT LEAST ONE COAT OF CORROSION RESISTANT PRIMER PAINT TO ALL SUPPORTS AND EQUIPMENT FABRICATED FROM FERROUS METAL.

3.3 DEMONSTRATION

SUPPLY TOOLS, EQUIPMENT, PERSONNEL TO DEMONSTRATE AND INSTRUCT THE OPERATING, AND MAINTENANCE PERSONNEL IN OPERATING, CONTROLLING, ADJUSTING, TROUBLE-SHOOTING, AND SERVICING OF ALL SYSTEMS AND EQUIPMENT DURING REGULAR WORK HOURS, PRIOR TO ACCEPTANCE.

3.4 FIRESTOPPING AND SMOKE SEALS

THE OWNER'S CONSULTANT SHALL CONDUCT MANDATORY DESTRUCTIVE REVIEWS FOR EACH TYPE OF INSTALLATION. DESTRUCTIVE TESTING SHALL BE AT THE DISCRETION OF THE OWNER'S CONSULTANT AND AUTHORITY HAVING JURISDICTION

ALLOW FOR DESTRUCTIVE TESTING OF 5% OF FIRESTOPPING APPLICATIONS. SHOULD INSTALLATIONS NOT CONFORM TO MANUFACTURER'S LISTED ASSEMBLY, AN ADDITIONAL 25% OF INSTALLATIONS MAY BE DESTRUCTIVELY TESTED AND SHOULD THERE BE MORE FAILURES, THE CONTRACTOR WILL BE RESPONSIBLE TO REMOVE ALL FIRESTOPPING PRODUCTS AND REINSTALL PRODUCTS CORRECTLY, AT NO ADDITIONAL COST TO THE PROJECT.

COMPLY WITH MANUFACTURER'S INSTRUCTIONS FOR INSTALLATION OF ALL FIRESTOPPING ASSEMBLIES. WHERE POSSIBLE, USE METAL SLEEVES FOR FLOOR PENETRATIONS TO PREVENT/MITIGATE THE CONSEQUENCES OF LEAKAGE OR FLOODING.

PERFORM UNDER THIS SECTION PATCHING AND REPAIRING OF FIRESTOP CAUSED BY CUTTING OR PENETRATING OF EXISTING FIRESTOP SYSTEMS ALREADY INSTALLED BY OTHER TRADES.

3.5 PIPE HANGERS AND SUPPORTS

PIPE SUPPORT SPACING AND HANGER ROD DIAMETER SHALL BE:

PIPE SIZE: NPS 1/2 ROD DIAMETER 9MM (3/8”), SPACING 1.8M (6')

PIPE SIZE: NPS 3/4 TO 1½ ROD DIAMETER 9MM (3/8”), SPACING 2.4M (8')

PIPE SIZE: NPS 2 TO 2½ ROD DIAMETER 9MM (3/8”), SPACING 3M (10')

PIPE SIZE: NPS 3 TO 4 ROD DIAMETER 16MM (5/8”), SPACING 3.6M (12')

3.7 VIBRATION ISOLATION

NEOPRENE WASHER/BUSHING: ISOLATE VARIABLE FREQUENCY DRIVE CONTROLLER USING NEOPRENE WASHER/BUSHING ISOLATORS OR SOFT GROMMETS SUCH THAT STRUCTURE BORNE NOISE TRANSMISSION TO OCCUPIED SPACE IS LESS THAN AIRBORNE NOISE TRANSMISSION.

RUBBER FLOOR MOUNTS: MOUNT IN-LINE PUMPS ON TWO (2) RUBBER FLOOR MOUNT ISOLATORS UNDER EACH SUPPORT FOOT. FOR EQUIPMENT MOUNTED ON A SLAB ON GRADE MOUNT ON RUBBER FLOOR MOUNT ISOLATORS UNLESS OTHERWISE SPECIFIED. PROVIDE PROTECTION OF THE RUBBER ELEMENT FROM CONTACT WITH OIL IN THE MECHANICAL ROOM.

SPRING FLOOR MOUNTS: ISOLATE ALL FLOOR OR PIER MOUNTED EQUIPMENT ON SPRING FLOOR MOUNT ISOLATORS, UNLESS OTHERWISE SPECIFIED.

SPRING HANGERS: LOCATE ISOLATION HANGERS AS NEAR TO THE OVERHEAD SUPPORT STRUCTURE AS POSSIBLE. INSTALLATION SHALL PERMIT HANGER BOX OR ROD TO MOVE THROUGH A 30 DEGREES ARC WITHOUT METAL TO METAL CONTACT. ALL DISCHARGE DUCTWORK RUNS FOR A DISTANCE OF 15M (50') FROM THE CONNECTED EQUIPMENT SHALL BE ISOLATED FROM THE BUILDING STRUCTURE BY MEANS OF SPRING HANGERS. SPRING DEFLECTION SHALL BE A MINIMUM OF 19MM (0.75").

3.8 EXPANSION COMPENSATION

PROVIDE STRUCTURAL WORK AND EQUIPMENT REQUIRED FOR EXPANSION AND CONTRACTION OF ALL PIPING. PROVIDE ANCHORS, GUIDES, AND EXPANSION JOINTS AS REQUIRED TO ADEQUATELY PROTECT THE PIPING SYSTEMS.

PROVIDE EXPANSION COMPENSATION FOR ALL PIPING SYSTEMS INCLUDING BUT NOT LIMITED TO: HEATING WATER, CHILLED WATER, STEAM AND CONDENSATE, CLOSED CONDENSER WATER SYSTEMS, AND ALL OTHER PIPING SYSTEMS THAT OPERATE AT VARYING TEMPERATURES.

ALL PIPING SHALL BE ANCHORED AND SUPPORTED IN SUCH A MANNER THAT STRAIN AND/OR WEIGHT DOES NOT COME UPON ANY APPARATUS AND PIPE BRANCH CONNECTIONS. EXPANSION JOINTS AND COMPENSATORS SHALL BE INSTALLED AND GUIDED AS PER MANUFACTURER'S RECOMMENDATIONS. ALL EQUIPMENT SHALL BE CONNECTED WITH UNIONS OR FLANGES TO PROVIDE FOR EASY REMOVAL. WHERE PIPING PASSES THROUGH WALLS OR FLOOR SLABS, THE SLEEVES SHALL BE OF SUFFICIENT SIZE TO ACCOMMODATE THE EXPANSION AND THE PIPE INSULATION, WITHOUT BINDING OR CRUSHING THE INSULATION OR PREVENTING THE EXPANSION OF THE PIPING.

IT IS THE CONTRACTOR`S RESPONSIBILITY TO RETAIN THE SERVICES OF A QUALIFIED PROFESSIONAL ENGINEER (REGISTERED IN THE PROJECT AREA) TO DESIGN THE PIPE EXPANSION SYSTEM FOR THE ACTUAL INSTALLED LAYOUT OF ALL PIPING SYSTEMS COVERED BY THIS SPECIFICATION SECTION (INCLUDING REFRIGERANT PIPING). THE EXPANSION SYSTEM MUST INCLUDE EXPANSION FITTINGS, COMPENSATORS, JOINTS, OR PIPING BENDS, PIPE GUIDES, AND PIPING ANCHORS. ANCHOR FORCES MUST BE COORDINATED WITH THE PROJECT STRUCTURAL ENGINEER.

THE INSTALLATION OF ALL PIPING SYSTEMS MUST FOLLOW THE DESIGN REQUIREMENTS OF THE CONTRACTOR'S QUALIFIED PROFESSIONAL ENGINEER THAT HAS DESIGNED THE ENTIRE PIPING SYSTEM TO ALLOW EXPANSION COMPENSATION.

SPECIAL ATTENTION SHOULD BE GIVEN TO STRAIGHT PIPE RUNS, PIPE RISER INSTALLATIONS AND NON-METALLIC PIPE INSTALLATIONS. AS A MINIMUM ON HOT PIPING, PROVIDE EXPANSION COMPENSATION ON EVERY OTHER FLOOR OF A NON-METALLIC PIPE RISER IN A SHAFT AND EVERY THIRD FLOOR FOR METALLIC PIPE RISERS. ALL PIPE TAKE-OFFS FROM THE RISER MUST ALSO BE DESIGNED TO ALLOW VERTICAL MOVEMENT OF THE RISER CONNECTION IF NEEDED. TAKE-OFFS WITH SPECIFICALLY DESIGNED SWING JOINTS WITH APPROPRIATE PIPING SUPPORT CAN BE USED TO ALLOW MOVEMENT.

UNLESS REQUIRED OTHERWISE BY THE CONTRACTOR'S ENGINEER, METALLIC PIPING EXPANSION COMPENSATION IS GENERALLY NOT REQUIRED FOR: PIPING RISERS LESS THAN 12M (39 FEET) IN VERTICAL HEIGHT, OR HORIZONTAL RUNS WITH STRAIGHT LENGTHS LESS THAN 11M (36 FEET) AND A TOTAL FLOATING PIPING SYSTEM LENGTH LESS THAN 30M (98 FEET). FLOATING SYSTEMS CONSIST OF PIPING SUPPORTS ALLOWING MOVEMENT IN AT LEAST 2 DIRECTIONS (PIPE HANGERS) AND EQUIPMENT CONNECTIONS WITH FLEXIBLE HOSES.

DIVISION 22 PLUMBING

1. GENERAL

1.1 SECTION SCOPE

PIPING, VALVES AND SPECIALTIES SERVING BUILDING WATER DISTRIBUTION SYSTEMS TO 1M (36”) OUTSIDE THE BUILDING AND SANITARY AND STORM DRAIN WASTE AND VENT PIPING, EQUIPMENT AND ACCESSORIES BETWEEN PLUMBING FIXTURES TO 1M (36”) FROM THE BUILDING.

1.2 CLEANOUTS

PROVIDE SANITARY AND STORM PIPING CLEANOUTS AT ALL CHANGES IN DIRECTION, AT THE ENDS OF ALL HORIZONTAL RUNS, AT THE BASE OF EVERY STACK, WHERE DRAINS LEAVE THE BUILDING; WHERE SHOWN ON THE DRAWINGS AND IN COMPLIANCE WITH THE LOCAL PLUMBING CODE, BYLAWS AND ORDINANCES.

PROVIDE CAULKED OR THREADED TYPE CLEANOUTS EXTENDED TO FINISHED FLOOR WALL SURFACE.

PROVIDE BOLTED COVER PLATE CLEAN OUTS ON VERTICAL RAINWATER LEADERS ONLY. ENSURE AMPLE CLEARANCE AT CLEAN OUT FOR RODDING OF DRAINAGE SYSTEM.

1.3 BACKFLOW PREVENTION DEVICES

ALL BACKFLOW PREVENTION DEVICES SHALL BE SELECTED AND INSTALLED IN COMPLIANCE WITH THE REQUIREMENTS OF CSA B64.10.

2. PRODUCTS

2.1 PIPE AND FITTINGS

SANITARY AND STORM DRAINAGE AND VENT (BELOW GRADE INSIDE BUILDING TO 1M OUTSIDE) SHALL BE CAST IRON CLASS 4000, PVC-DWV SCHEDULE 40 OR ABS-DWV (SOLID CORE) SCHEDULE 40.

DOMESTIC WATER (ABOVE GRADE INSIDE BUILDING) SHALL BE:

TYPE "K" COPPER FOR HOT AND COLD WATER HARD DRAWN SEAMLESS COPPER TUBING TO ASTM B88 WITH CAST BRASS OR WROUGHT COPPER SOLDER JOINT PRESSURE FITTINGS WITH 95/5 SN/SB OR SILVABRITE 100 SOLDER JOINTS.

PRESS TO CONNECT COPPER AND COPPER ALLOY 12MM TO 50MM FITTINGS TO PRESS FITTINGS SHALL CONFORM TO: ASME B16.51, ASTM F3226 OR IAPMO/ANSI/CAN Z1117. PRESSING TOOLS AND JAWS USED SHALL BE APPROVED FOR USE BY THE FITTING MANUFACTURER.

PUSH TO CONNECT 12MM TO 50MM FITTINGS SUITABLE FOR USE WITH COPPER TUBING AND CERTIFIED TO NSF/ANSI 61, NSF/ANSI 14 AND ASSE 1061 FOR USE WITH POTABLE WATER. LEAD FREE DZR BRASS BODY, EPDM O-RING, STAINLESS STEEL GRAB RING.

DOMESTIC WATER (BELOW GRADE INSIDE BUILDING TO 1M OUTSIDE) SHALL BE:

TYPE "K" SOFT COPPER TO 4 NPS DIAMETER OR PVC C900 DR18 FROM 4 NPS TO 12 NPS (ADAPT TO APPROVED NON-PLASTIC MATERIAL PRIOR TO PENETRATION THROUGH THE FLOOR SLAB.

NATURAL GAS: STEEL SCHEDULE 40, A53 GRADE B. JOINING METHODS TO CSA B149.1 NATURAL GAS AND PROPANE INSTALLATION CODE OR BC GAS SAFETY REGULATION. NPS 2 AND BELOW TO BE THREADED, PRESS-CONNECT, OR WELDED. NPS 2 ½ TO NPS 4 TO BE PRESS-CONNECT OR WELDED. PIPING GREATER THAN NPS 4 SHALL BE WELDED.

2.2 VALVES

WHEREVER POSSIBLE ALL VALVES SHALL BE OF ONE MANUFACTURER.

GROOVED VALVES SHALL BE OF THE SAME MANUFACTURER AS THE ADJOINING COUPLINGS.

PROVIDE VALVES WITH MANUFACTURER'S NAME AND PRESSURE RATING CLEARLY MARKED ON THE OUTSIDE OF BODY. ALL VALVES MUST BE SUITABLE IN ALL RESPECTS FOR SERVICE USED.

ALL VALVES SHALL HAVE A PROVINCIAL CRN NUMBER WHICH IS CURRENT.

BALL VALVES 2 NPS AND UNDER SHALL BE LOW LEAD FORGED BRASS BODY, 2 PIECE BODY, FULL PORT, CHROME PLATED BALL, PTFE SEATS, BLOW OUT PROOF STEM, ADJUSTABLE PACKING NUT, FOR DOMESTIC WATER SERVICE, CLASS 4140 KPA (600 PSI) W.O.G.

GATE VALVES 2 NPS AND UNDER SHALL BE LEAD FREE BRONZE BODY, SOLID WEDGE DISC, BRONZE OR STAINLESS STEEL TRIM, NON-RISING STEM, FOR DOMESTIC WATER SERVICE, CLASS 1380 KPA (200 PSI) W.O.G.

GATE VALVES 2-½ NPS AND OVER SHALL BE CAST IRON BODY, SOLID WEDGE DISC, BRONZE OR STAINLESS STEEL TRIM, RISING STEM, OUTSIDE SCREW AND YOKE COMPLYING WITH MSS SP 70, CLASS 1380 KPA (200 PSI) W.O.G.

GLOBE VALVES 2 NPS AND UNDER SHALL BE LEAD FREE BRONZE BODY, SWIVEL TYPE STAINLESS STEEL DISC, UNION BONNET, FOR DOMESTIC WATER SERVICE, CLASS 1380 KPA (200 PSI) W.O.G.

CHECK VALVES 2 NPS AND SMALLER SHALL BE LEAD FREE BRONZE SWING CHECK WITH BRONZE DISC CAPABLE OF BEING REGROUND, Y PATTERN, SUITABLE FOR DOMESTIC WATER USE, CLASS 1380 KPA (200 PSI) W.O.G.

PRESSURE REDUCING VALVE NPS 1 AND SMALLER SHALL BE LEAD FREE COPPER SILICON ALLOY BODY OR LOW LEAD BRONZE BODY, SS INTEGRAL STRAINER, RENEWABLE SS SEAT, SERVICEABLE INLINE, BUILT IN BYPASS CHECK VALVE, SUITABLE FOR HOT AND COLD WATER POTABLE WATER. RATED AT MAXIMUM INLET PRESSURE OF 2100 KPA (305 PSI) AND 82°C (180°F) TEMPERATURE.

PRESSURE REDUCING VALVE NPS 1-¼ NPS TO NPS 2 SHALL BE PILOT OPERATED WITH LOW FLOW BYPASS, DIAPHRAGM ACTUATED GLOBE VALVE, LEAD FREE, BRONZE BODY OR DUCTILE IRON TO ASTM A536. LEAD FREE BRONZE, STAINLESS STEEL OR DUCTILE IRON INTERNALS. ALL DUCTILE IRON COMPONENTS INCLUDING BODY AND COVER SHALL BE LINED AND COATED WITH EPOXY COATING.

REDUCED PRESSURE BACKFLOW ASSEMBLY (RPBA) SHALL BE 2 NPS AND SMALLER, LEAD FREE CAST COPPER SILICONE ALLOY BODY, PRESSURE DIFFERENTIAL RELIEF VALVE, REPLACEABLE CHECK MODULE SEATS AND DISCS, TWO ISOLATION VALVES, TEST COCKS AND A STRAINER. COMPLY WITH CSA B64.4 AND AWWA C511.

STRAINERS SHALL BE ¼ - 2 NPS THREADED ENDS, BRONZE BODY, 1034 KPA (150 PSI) RATING.

WATER HAMMER ARRESTORS SHALL BE BELLOWS TYPE WITH WELDED STAINLESS STEEL NESTING BELLOWS OR PISTON STYLE AND STAINLESS STEEL CASING. AIR CHAMBERS ARE UNACCEPTABLE.

2.3 PREFORMED PIPE INSULATION

PREFORMED INSULATION, FINE FIBROUS GLASS OR FORMED MINERAL FIBRE PIPE INSULATION WITH ALL SERVICE JACKET VAPOUR RETARDER (ASJ). ASJ SHALL BE RE-ENFORCED WITH GLASS FIBRE, FACTORY APPLIED WITH PRESSURE SENSITIVE LAP CLOSURE. MAXIMUM “K” VALUE AT 38°C (100°F) = 0.035 W/M.°C (0.24 BTU.IN/HR.FT2. °F). ACCEPTABLE MANUFACTURERS: MANSON INSULATION, KNAUF, ROXUL, JOHNS MANVILLE, FIBREX

THERMOCANVAS FINISHING JACKET: FIRE RATED, 170G (6 OZ.) FIRE RETARDANT CANVAS JACKET FOR COVERING MECHANICAL INSULATION INDOORS, 25/50 FIRE CLASS, PLAIN WAVE COTTON, NO DYES.

PVC FINISHING JACKET: WHITE, UV RESISTANT, FOR INDOOR OR OUTDOOR APPLICATIONS, 25/50 FIRE CLASS, MINIMUM 0.50 MM (0.02”) THICK.

ALUMINUM FINISHING JACKET: 0.51 MM (22 GA.) THICK STUCCO OR SMOOTH ALUMINUM JACKETING WITH LONGITUDINAL SLIP JOINTS AND 50MM (2") END LAPS WITH FACTORY APPLIED PROTECTIVE LINER ON INTERIOR SURFACE.

2.4 CLEANOUTS

FLOOR - UNFINISHED AREA: CAST IRON FLOOR LEVEL CLEANOUT ASSEMBLY WITH EXTRA HEAVY DUTY, ROUND, ADJUSTABLE, SCORIATED, SECURED CAST IRON TOP AND NO-HUB OUTLET. SUITABLE FOR HEAVY TRAFFIC

2.5 TRAP SEAL PRIMERS

PROVIDE FLOW ACTUATED TYPE PRIMING DEVICE, VACUUM BREAKER PORTS AND INTERNAL BACK-FLOW PROTECTION, LEAD FREE BRASS BODY, STAINLESS STEEL SCREEN, FACTORY PRE-SET, ACTIVATION BY A MINIMUM FLOW RATE OF 0.03L/S @ 138 KPA (0.5 GPM @ 20 PSI). ½ NPS INLET AND OUTLET, CAPABLE OF SERVING 1 TO 4 TRAPS.

3. EXECUTION

3.1 PIPING

PIPE CONNECTIONS NPS 1½ AND LESS SHALL BE SOLDERED OR SCREWED JOINT UNLESS NOTED OTHERWISE. FOR PEX, USE COLD EXPANSION FITTINGS INSTALLED WITH TOOLS AS RECOMMENDED BY THE FITTING MANUFACTURER.

PIPE CONNECTIONS NPS 2 SHALL BE SCREWED JOINT FOR LIQUID SYSTEMS UNLESS NOTED OTHERWISE.

PIPE CONNECTIONS NPS 2½ AND LARGER SHALL BE WELDED OR FLANGED UNLESS NOTED OTHERWISE.

PRESS TO CONNECT FITTINGS SHALL BE INSTALLED ACCORDING TO THE MANUFACTURER'S INSTRUCTIONS.

PUSH TO CONNECT FITTINGS SHALL BE INSTALLED ACCORDING TO THE MANUFACTURER'S INSTRUCTIONS.

GAS PIPE CONNECTIONS INSIDE BUILDING - SCREW, PRESS CONNECT OR WELD NPS 2 AND UNDER, PRESS CONNECT OR WELD NPS 2-1/2 TO NPS 4 AND WELD GREATER THAN NPS 4.

GAS SERVICE OUTSIDE BUILDING - WELD ALL SIZES BELOW GROUND.

USE DIELECTRIC TYPE COUPLINGS WHEN JOINING DISSIMILAR METAL PIPES.

USE LEAD FREE SOLDER FOR SOLDERING DOMESTIC WATER COPPER PIPE.

PROVIDE EXPANSION COMPENSATION FOR ALL FLUID PIPING SYSTEMS.

IT IS THE CONTRACTOR`S RESPONSIBILITY TO RETAIN THE SERVICES OF A QUALIFIED PROFESSIONAL ENGINEER (REGISTERED IN THE PROJECT AREA) TO DESIGN THE PIPE EXPANSION SYSTEM FOR THE ACTUAL INSTALLED LAYOUT OF ALL PIPING SYSTEMS COVERED BY THIS SPECIFICATION SECTION. THE EXPANSION SYSTEM MUST INCLUDE EXPANSION FITTINGS, COMPENSATORS, JOINTS, OR PIPING BENDS, PIPE GUIDES, AND PIPING ANCHORS. ANCHOR FORCES MUST BE COORDINATED WITH THE PROJECT STRUCTURAL ENGINEER.

THE INSTALLATION OF ALL PIPING SYSTEMS MUST FOLLOW THE DESIGN REQUIREMENTS OF THE CONTRACTOR'S QUALIFIED PROFESSIONAL ENGINEER THAT HAS DESIGNED THE ENTIRE PIPING SYSTEM TO ALLOW EXPANSION COMPENSATION.

SPECIAL ATTENTION SHOULD BE GIVEN TO STRAIGHT PIPE RUNS, PIPE RISER INSTALLATIONS AND NON-METALLIC PIPE INSTALLATIONS. AS A MINIMUM ON HOT PIPING, PROVIDE EXPANSION COMPENSATION ON EVERY OTHER FLOOR OF A NON-METALLIC PIPE RISER IN A SHAFT AND EVERY THIRD FLOOR FOR METALLIC PIPE RISERS. ALL PIPE TAKE-OFFS FROM THE RISER MUST ALSO BE DESIGNED TO ALLOW VERTICAL MOVEMENT OF THE RISER CONNECTION IF NEEDED. TAKE-OFFS WITH SPECIFICALLY DESIGNED SWING JOINTS WITH APPROPRIATE PIPING SUPPORT CAN BE USED TO ALLOW MOVEMENT.

3.2 DOMESTIC WATER PRESSURE TESTING

ADVISE CONSULTANT OR PROJECT MANAGER 48 HOURS MINIMUM PRIOR TO PERFORMANCE OF PRESSURE TESTS.

A WATER PRESSURE TEST SHALL BE CONDUCTED PRIOR TO THE DOMESTIC WATER SYSTEM BEING PUT INTO OPERATION. AN AIR PRESSURE TEST MAY ONLY BE USED IN FREEZING CONDITIONS UNLESS ACCEPTABLE BY THE AUTHORITY HAVING JURISDICTION.

WATER PRESSURE TESTS SHALL USE ONLY POTABLE WATER FOR TESTING OF DOMESTIC WATER SYSTEMS. THE DOMESTIC WATER SYSTEM SHALL BE ABLE TO WITHSTAND WITHOUT LEAKING, A WATER PRESSURE AT LEAST EQUAL TO THE MAXIMUM IN-SERVICE PRESSURE. DURATION OF A WATER PRESSURE TEST SHALL BE AS RECOMMENDED BY THE PIPING AND FITTING MATERIAL MANUFACTURER.

DURING FREEZING CONDITIONS, AN AIR PRESSURE TEST MAY BE USED FOR DOMESTIC WATER SYSTEM TESTING. THE DOMESTIC WATER SYSTEM SHALL BE ABLE TO WITHSTAND AN AIR PRESSURE OF NOT LESS THAN 700 KPA (100 PSI) OR THE SYSTEM MAXIMUM IN-SERVICE WORKING PRESSURE, WHICHEVER IS GREATER, FOR AT LEAST 2 HOURS WITHOUT A DROP IN PRESSURE. IF A MANUFACTURER OF THE PIPE AND FITTINGS BEING TESTED STATES AN AIR PRESSURE TEST IS NOT RECOMMENDED, A WATER PRESSURE TEST SHALL BE PERFORMED.

ALL TEST PRESSURES USED FOR BOTH WATER AND AIR PRESSURE TESTING SHALL NOT EXCEED THE PIPE MANUFACTURERS RECOMMENDED MAXIMUM TEST PRESSURES.

ANY LEAKS SHALL BE CORRECTED AND THE SYSTEM RETESTED.

PRIOR TO TESTS, ISOLATE EQUIPMENT AND OTHER PARTS WHICH ARE NOT DESIGNED TO WITHSTAND TEST PRESSURE OR MEDIA.

INSULATE OR CONCEAL WORK ONLY AFTER APPROVAL AND CERTIFICATION OF TESTS BY AUTHORITIES.

SUBMIT COPIES OF PRESSURE TEST REPORTS FOR ALL SECTIONS OF PIPING.

3.3 GAS DISTRIBUTION PIPING AND PRESSURE TESTING

REAM PIPE ENDS. CLEAN SCALE AND DIRT, INSIDE AND OUTSIDE BEFORE AND AFTER ASSEMBLY.

DURING CONSTRUCTION, PROTECT ALL OPENINGS IN PIPING AND EQUIPMENT, BY CAPPING OR PLUGGING TO PREVENT ENTRY OF DIRT.

CONNECT TO EQUIPMENT IN ACCORDANCE WITH MANUFACTURER'S INSTRUCTION UNLESS OTHERWISE INDICATED.

SLOPE PIPING DOWN IN DIRECTION OF FLOW TO LOW POINTS.

USE ECCENTRIC REDUCERS AT PIPE SIZE CHANGE INSTALLED TO PROVIDE POSITIVE DRAINAGE.

USE DIELECTRIC TYPE FITTINGS WHERE BURIED SERVICE ENTERS AND CONNECTS TO BUILDING PIPING.

PRESSURE TEST ALL PIPING IN ACCORDANCE WITH CSA B149.1, NATURAL GAS AND PROPANE INSTALLATION CODE. EXAMINE ALL JOINTS FOR LEAKS AND REMAKE ALL LEAKING JOINTS WITH NEW MATERIALS. PURGE ALL PIPING AFTER PRESSURE TESTS IN ACCORDANCE WITH CSA B149.1, NATURAL GAS AND PROPANE INSTALLATION CODE. SUBMIT COPIES OF PRESSURE TEST REPORTS FOR ALL SECTIONS OF PIPING.

3.4 SANITARY DRAINAGE TESTING

EXCEPT FOR AN EXTERNAL LEADER OR A FIXTURE OUTLET PIPE, PIPES IN A DRAINAGE SYSTEM SHALL BE CAPABLE OF WITHSTANDING, WITHOUT LEAKAGE, A WATER PRESSURE TEST, AIR PRESSURE TEST AND FINAL TEST. PIPES IN A DRAINAGE SYSTEM SHALL BE CAPABLE OF MEETING A BALL TEST.

A WATER PRESSURE TEST SHALL CONSIST OF A WATER COLUMN OF 3 M (10 FT.) FOR A DURATION OF NO LESS THAN 15 MINUTES OR AS REQUIRED BY THE AUTHORITY HAVING JURISDICTION.

DURING FREEZING CONDITIONS AN AIR PRESSURE TEST MAY BE USED AND IT SHALL BE CONDUCTED IN ACCORDANCE WITH THE PIPE MANUFACTURER'S INSTRUCTIONS. THE PIPING SYSTEM SHALL BE CAPABLE OF WITHSTANDING AN AIR PRESSURE OF 35 KPA (5 PSI) WITHOUT LEAKAGE FOR A MINIMUM DURATION OF 15 MINUTES OR AS REQUIRED BY THE AUTHORITY HAVING JURISDICTION.

ANY LEAKS SHALL BE CORRECTED, AND THE SYSTEM RETESTED

3.5 VALVES

INSTALL ALL VALVES IN ACCORDANCE WITH MANUFACTURER'S RECOMMENDATIONS.

INSTALL VALVES IN ACCESSIBLE LOCATIONS WITH STEMS UPRIGHT OR ANGLED 45° ABOVE HORIZONTAL UNLESS APPROVED OTHERWISE. VALVES MUST BE ACCESSIBLE WITHOUT REMOVING ADJACENT PIPING.

PROVIDE STEM EXTENSIONS ON ALL INSULATED VALVES.

PROVIDE FULL PORT BALL VALVES IN PIPING 50 MM (2”) AND SMALLER AND BUTTERFLY VALVES IN PIPING 65 MM (2-½”) AND LARGER FOR SHUT-OFF, EQUIPMENT ISOLATION, THROTTLING, BYPASS OR MANUAL FLOW CONTROL SERVICES.

PROVIDE ISOLATION VALVES AT BRANCH TAKE-OFFS, TO ISOLATE EACH PIECE OF EQUIPMENT, UPSTREAM OF ALL METERS, GAUGES, AUTOMATIC AIR VENTS, AND AS INDICATED.

USE SILENT CHECK VALVES ON DISCHARGE OF PUMPS AND IN VERTICAL PIPES WITH DOWNWARD FLOW, AND AS INDICATED.

USE CIRCUIT SETTING GLOBE VALVES COMPLETE WITH LOCK SHIELD TO CONTROL FLOW IN CIRCUITS, EXCEPT WHERE BALANCING COCKS ARE SPECIFICALLY SPECIFIED.

INSTALL BALANCING VALVES IN RETURN PIPING CONNECTIONS TO EACH TERMINAL HEATING AND COOLING UNIT - E.G. RADIATORS, UNIT HEATERS, FAN COIL UNITS, HEATING AND COOLING COILS, AND RADIANT PANELS.

3.6 PIPING INSULATION MINIMUM THICKNESS SCHEDULE (ASHRAE 90.1)

ABOVE GRADE EXTERIOR:

- RUNOUTS UP TO NPS 1 = 40MM MINIMUM THICKNESS
- PIPE DIAMETERS NPS 1 TO 2 = 65MM MINIMUM THICKNESS
- PIPE DIAMETERS NPS 2½ TO 4 = 75MM MINIMUM THICKNESS
- HOT WATER 41°C TO 60°C (106-141°F):
- PIPE DIAMETERS UP TO NPS 1¼ = 25MM MINIMUM THICKNESS
- PIPE DIAMETERS NPS 1-½ AND LARGER = 40MM MINIMUM THICKNESS

COLD WATER ABOVE 5°C (41°F):

- ALL PIPE DIAMETERS = 25MM MINIMUM THICKNESS

NOTE: WHERE THE THERMAL CONDUCTIVITY OF A PROPOSED INSULATION IS GREATER THAN SPECIFIED, THE THICKNESS WILL BE INCREASED BY THE RATIO OF U2/U1.

U2 = PROPOSED INSULATION “K” VALUE AT THE TABLE MEAN RATING TEMPERATURE.

U1 = UPPER RANGE LIMIT “K” VALUE FROM THE TABLE ABOVE.

3.8 PIPING FINISH SCHEDULE

INDOORS CONCEALED, FACTORY FINISH

INDOORS EXPOSED IN MECHANICAL ROOM AND ELSEWHERE, CANVAS JACKET

INDOORS, EXPOSED IN UTILITY AREAS, PARKADE, ETC., PVC JACKET

OUTDOORS, METAL JACKET

3.9 SAFES, FLASHING AND VENT TERMINALS

PROVIDE FLEXIBLE FLASHING AND METAL COUNTER FLASHING WHERE PIPING PENETRATES WEATHER OR WATERPROOFED WALLS AND FLOORS.

CPE, CHLORALOY 240 LINING OR LEAD MATERIAL MAY BE USED AT FLOOR DRAINS AND CLEANOUTS. CHLORALOY SHALL BE SOLVENT WELDED TO MANUFACTURER'S INSTALLATION INSTRUCTIONS. LEAD SHALL NOT BE USED ON ROOFS WHERE THE ROOFING MATERIAL IS APPLIED BY A TORCH-ON METHOD.

FLASH FLOOR DRAINS IN FLOORS WITH TOPPING OVER OCCUPIED AREAS WITH LEAD OR CPE MEMBRANE, A MINIMUM OF 300MM (12”) CLEAR ON SIDES WITH MINIMUM 900MM X 900MM (36” X 36”) SHEET SIZE. FASTEN FLASHING TO DRAIN CLAMP DEVICE.

3.10 BACKFLOW PREVENTION DEVICES

ALL BACKFLOW PREVENTION DEVICES SHALL BE TESTED ONLY BY A CERTIFIED BACKFLOW ASSEMBLY TESTER.

Rev	Date	Description	Drawn	Design	App'd
B	2025-06-13	ISSUED FOR DEVELOPMENT PERMIT	MC/SD	MC/SD	IT
A	2025-05-16	ISSUED FOR 100% DEVELOPMENT DESIGN	MC/SD	MC/SD	IT

INFORMATION ON EXISTING UNDERGROUND FACILITIES MAY NOT BE COMPLETE OR ACCURATE. McELHANNEY, ITS EMPLOYEES AND DIRECTORS ARE NOT RESPONSIBLE NOR LIABLE FOR THE LOCATION OF ANY UNDERGROUND CONDUITS, PIPES, CABLES OR OTHER FACILITIES WHETHER SHOWN OR OMITTED FROM THIS PLAN. PRIOR TO CONSTRUCTION CONTRACTOR SHALL EXPOSE LOCATIONS OF ALL EXISTING FACILITIES BY HAND DIGGING OR HYDROVAC AND ADVISE THE ENGINEER OF POTENTIAL CONFLICTS.

THE UNIVERSITY OF BRITISH COLUMBIA

ORIGINAL DWG SIZE: A1 (594 x 841mm)

McElhanney

Suite 2300
13450 102nd Avenue
Surrey BC
Canada V3T 5X3
T 604 596 0391

AME Group

200 - 638 Smithe St
Vancouver BC, V6B 1E3
T.604-684-5995 amegroup.ca

PRELIMINARY
NOT FOR
CONSTRUCTION

THIS DRAWING HAS NOT BEEN APPROVED AND MAY CONTAIN ERRORS AND OMISSIONS

THE UNIVERSITY OF BRITISH COLUMBIA
6200 UNIVERSITY BLVD, VANCOUVER, BC V6T 1Z4

UBC SOUTH CAMPUS WORK YARD
SPECIFICATIONS

Drawing No.
M300

Project Number
2121-01293-00

Rev.
B

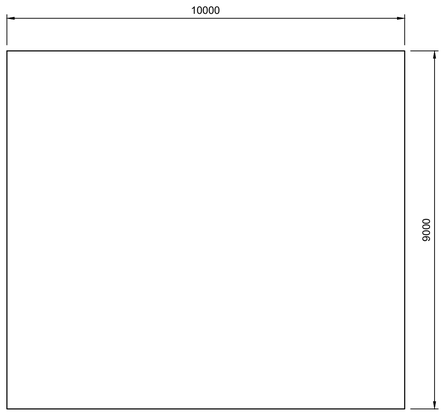

BMS CONCRETE SLAB No. 1
SCALE 1:75

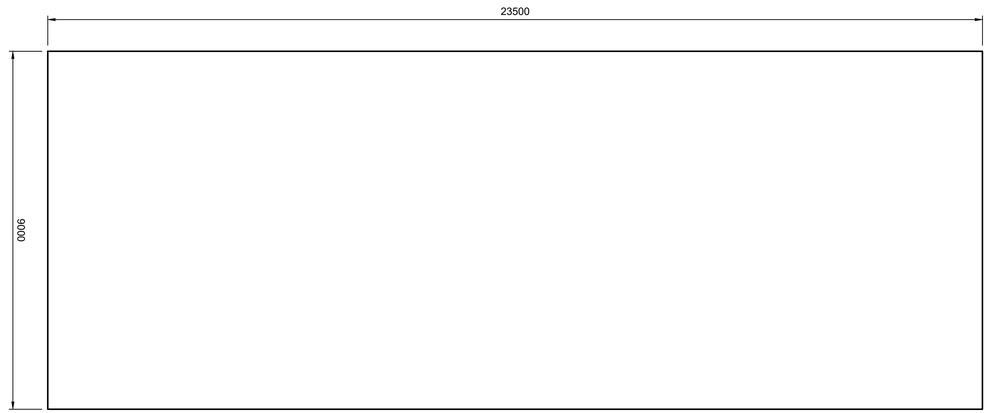

BMS CONCRETE SLAB No. 2
SCALE 1:75

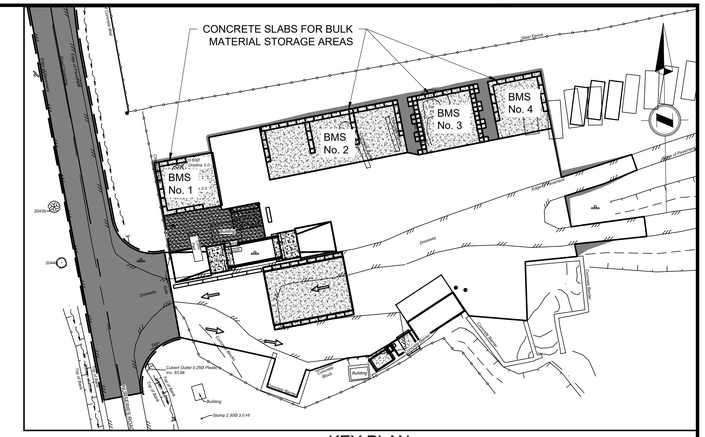

KEY PLAN
SCALE 1:500

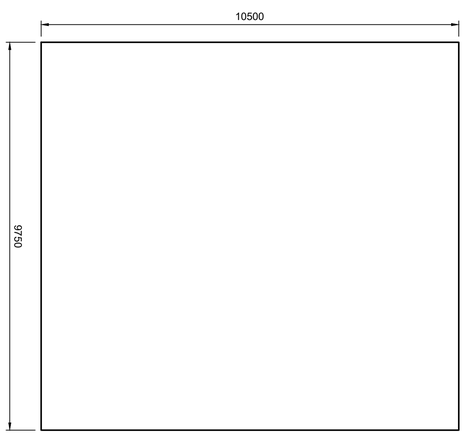

BMS CONCRETE SLAB No. 3
SCALE 1:75

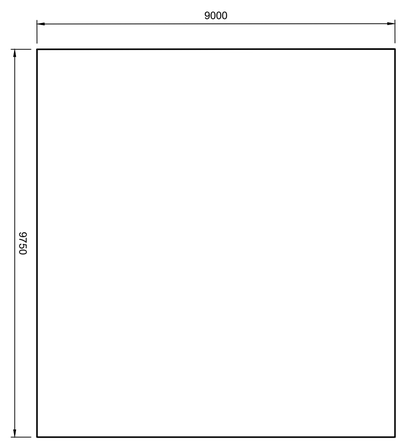

BMS CONCRETE SLAB No. 4
SCALE 1:75

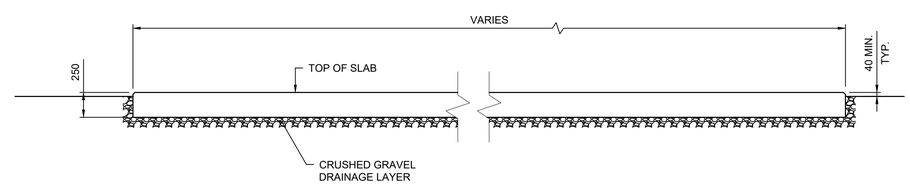

TYPICAL SECTION
SCALE 1:30

NOTES:

1. CONDUITS, BLOCK-OUTS, AND MISCELLANEOUS STEEL EMBEDMENTS TO COME.

Rev	Date	Description	Drawn	Design	App'd
B	2025-06-13	ISSUED FOR DEVELOPMENT PERMIT	MD	WM	FP
A	2025-05-16	ISSUED FOR 100% DEVELOPMENT DESIGN	MD	WM	FP

THE UNIVERSITY OF BRITISH COLUMBIA

ORIGINAL DWG SIZE: ANSI D (22" x 34")

McElhanney
Suite 200
858 Beatty Street
Vancouver BC
Canada V6B 1C1
T 604 683 8521

PRELIMINARY
NOT FOR
CONSTRUCTION

THIS DRAWING HAS NOT BEEN APPROVED AND MAY CONTAIN ERRORS AND OMISSIONS

THE UNIVERSITY OF BRITISH COLUMBIA
6200 UNIVERSITY BLVD, VANCOUVER, BC V6T 1Z4

UBC SOUTH CAMPUS WORKS YARD BULK MATERIALS STORAGE FOUNDATION DETAILS

Drawing No.
S101

Project Number
2121-01293-00

Rev.
B

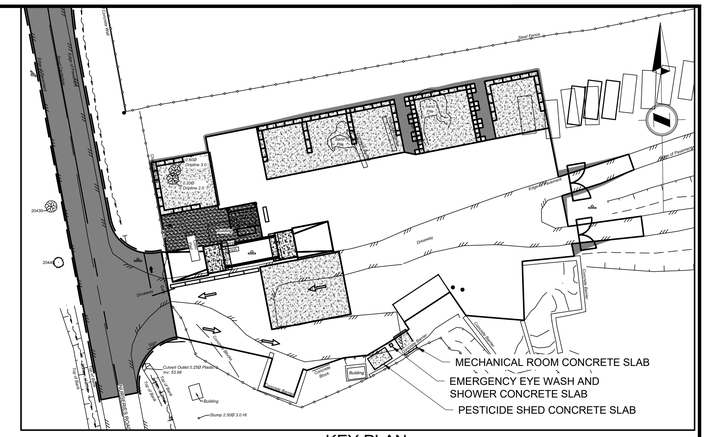

KEY PLAN
SCALE 1:500

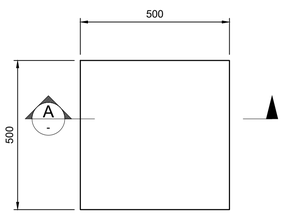

EMERGENCY EYE WASH AND SHOWER CONCRETE SLAB
SCALE 1:10

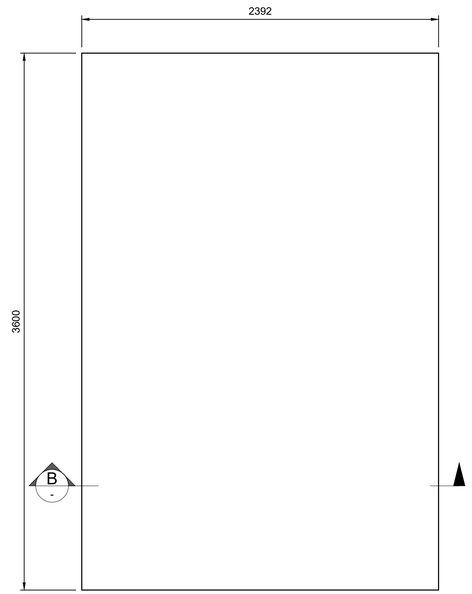

NEW MECHANICAL ROOM CONCRETE SLAB
SCALE 1:20

PESTICIDE SHED CONCRETE SLAB
SCALE 1:20

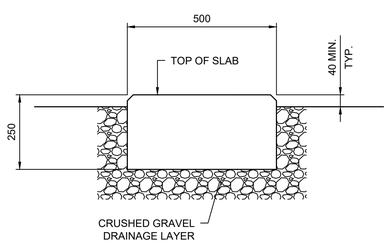

SECTION A
SCALE 1:30

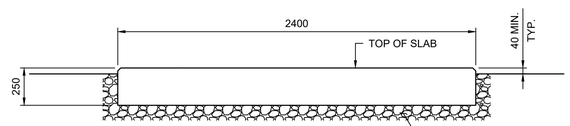

SECTION B
SCALE 1:20

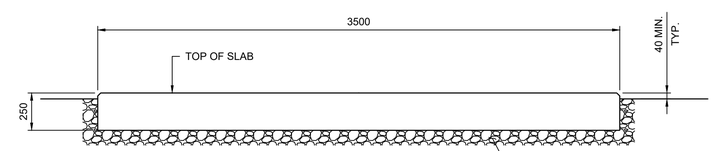

SECTION C
SCALE 1:20

NOTES:

1. CONDUITS, BLOCK-OUTS, AND MISCELLANEOUS STEEL EMBEDMENTS TO COME.

Rev	Date	Description	Drawn	Design	App'd
B	2025-06-13	ISSUED FOR DEVELOPMENT PERMIT	MD	WM	FP
A	2025-05-16	ISSUED FOR 100% DEVELOPMENT DESIGN	MD	WM	FP

THIS DRAWING AND DESIGN HAS BEEN PREPARED FOR THE CLIENT IDENTIFIED, TO MEET THE STANDARDS AND REQUIREMENTS OF THE APPLICABLE PUBLIC AGENCIES AT THE TIME OF PREPARATION. McELHANNEY, ITS EMPLOYEES, SUBCONSULTANTS AND AGENTS WILL NOT BE LIABLE FOR ANY LOSSES OR OTHER CONSEQUENCES RESULTING FROM THE USE OR RELIANCE UPON, OR ANY CHANGES MADE TO, THIS DRAWING, BY ANY THIRD PARTY, INCLUDING CONTRACTORS, SUPPLIERS, CONSULTANTS AND STAKEHOLDERS, OR THEIR EMPLOYEES OR AGENTS, WITHOUT McELHANNEY'S PRIOR WRITTEN CONSENT.

INFORMATION ON EXISTING UNDERGROUND FACILITIES MAY NOT BE COMPLETE OR ACCURATE. McELHANNEY, ITS EMPLOYEES AND DIRECTORS ARE NOT RESPONSIBLE NOR LIABLE FOR THE LOCATION OF ANY UNDERGROUND CONDUITS, PIPES, CABLES OR OTHER FACILITIES WHETHER SHOWN OR OMITTED FROM THIS PLAN. PRIOR TO CONSTRUCTION CONTRACTOR SHALL EXPOSE LOCATIONS OF ALL EXISTING FACILITIES BY HAND DIGGING OR HYDROVAC AND ADVISE THE ENGINEER OF POTENTIAL CONFLICTS.

THE UNIVERSITY OF BRITISH COLUMBIA

ORIGINAL DWG SIZE: ANSI D (22" x 34")

McElhanney
Suite 200
858 Beatty Street
Vancouver BC
Canada V6B 1C1
T 604 683 8521

PRELIMINARY
NOT FOR
CONSTRUCTION

THIS DRAWING HAS NOT BEEN APPROVED AND MAY CONTAIN ERRORS AND OMISSIONS

THE UNIVERSITY OF BRITISH COLUMBIA
6200 UNIVERSITY BLVD, VANCOUVER, BC V6T 1Z4

UBC SOUTH CAMPUS WORKS YARD MECHANICAL ROOM, EMERGENCY EYE WASH AND PESTICIDE SHED FOUNDATION DETAILS

Drawing No.
S102

Project Number
2121-01293-00

Rev.
B

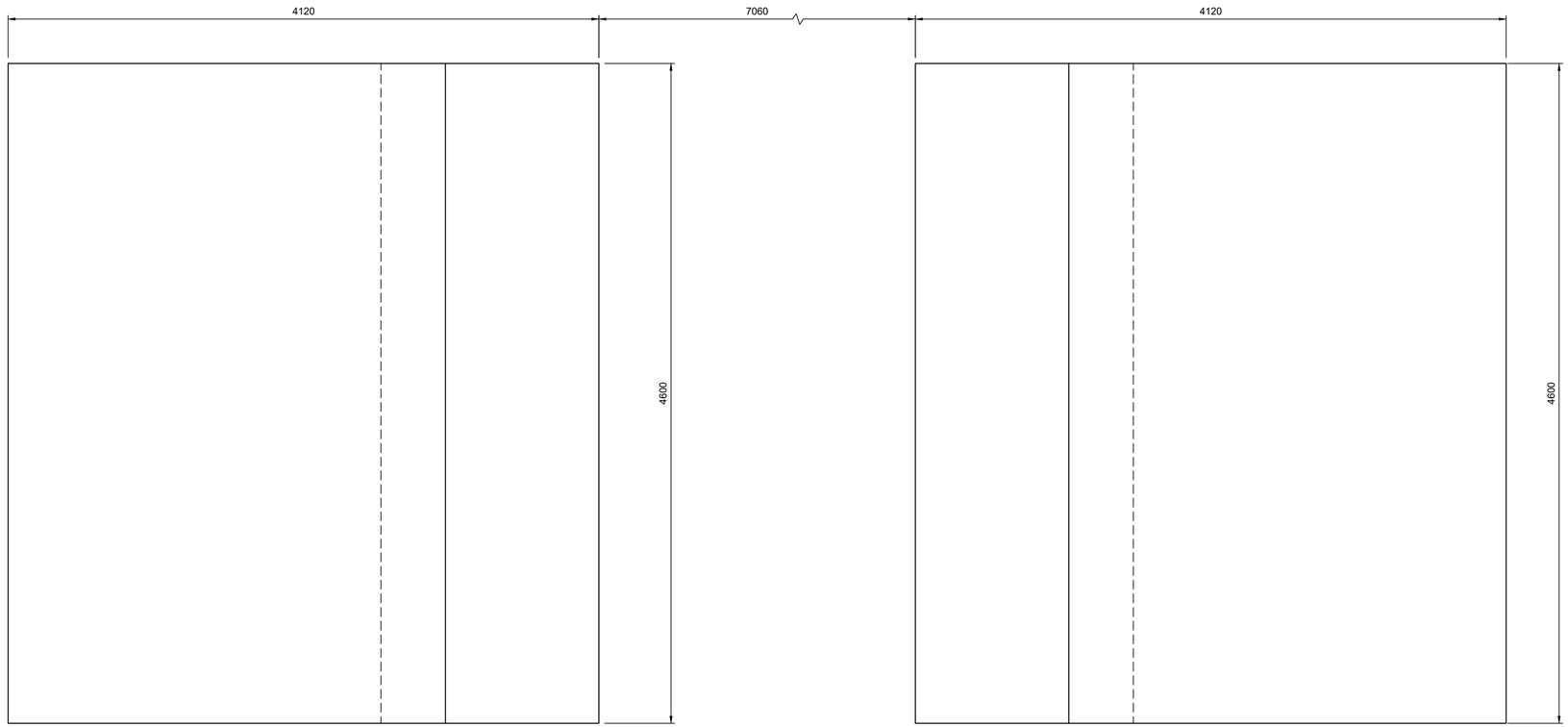

WEIGHT SCALE CONCRETE SLAB
SCALE 1:20

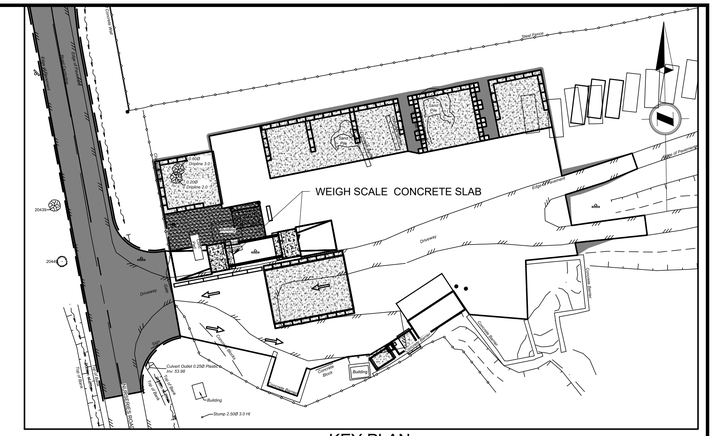

KEY PLAN
SCALE 1:500

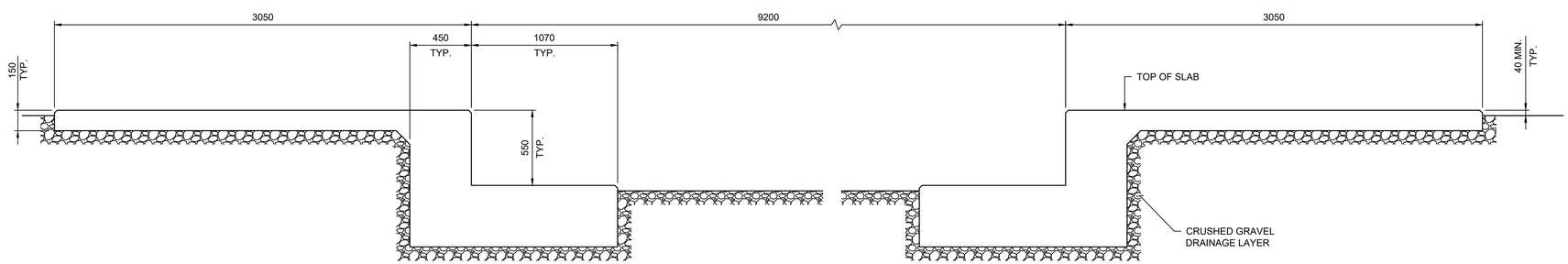

TYPICAL SECTION
SCALE 1:20

NOTES:

1. CONDUITS, BLOCK-OUTS, AND MISCELLANEOUS STEEL EMBEDMENTS TO COME.

Rev	Date	Description	Drawn	Design	App'd
B	2025-06-13	ISSUED FOR DEVELOPMENT PERMIT	MD	WM	FP
A	2025-05-16	ISSUED FOR 100% DEVELOPMENT DESIGN	MD	WM	FP

THE UNIVERSITY OF BRITISH COLUMBIA

ORIGINAL DWG SIZE: ANSI D (22" x 34")

McElhanney
Suite 200
858 Beatty Street
Vancouver BC
Canada V6B 1C1
T 604 683 8521

PRELIMINARY
NOT FOR
CONSTRUCTION

THIS DRAWING HAS NOT BEEN APPROVED AND MAY CONTAIN ERRORS AND OMISSIONS

THE UNIVERSITY OF BRITISH COLUMBIA
6200 UNIVERSITY BLVD, VANCOUVER, BC V6T 1Z4

UBC SOUTH CAMPUS WORKS YARD WEIGH SCALE FOUNDATION DETAILS

Drawing No.
S103

Project Number
2121-01293-00

Rev.
B

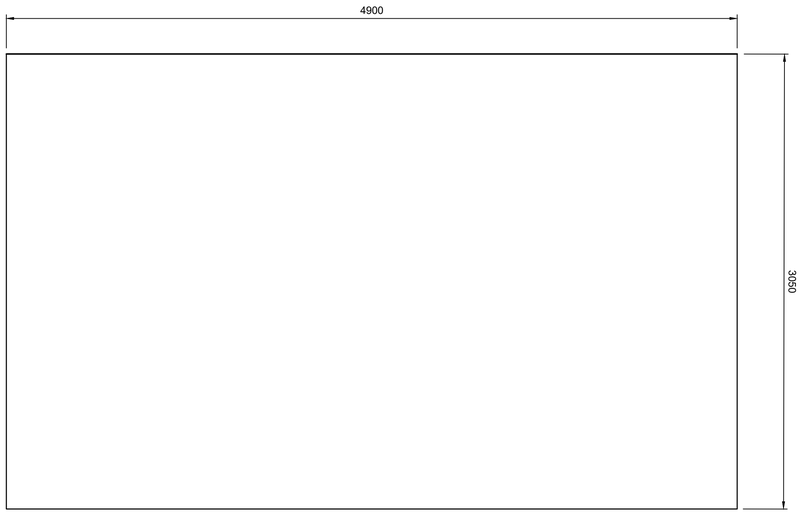

GATE HOUSE TRAILER CONCRETE SLAB
SCALE 1:20

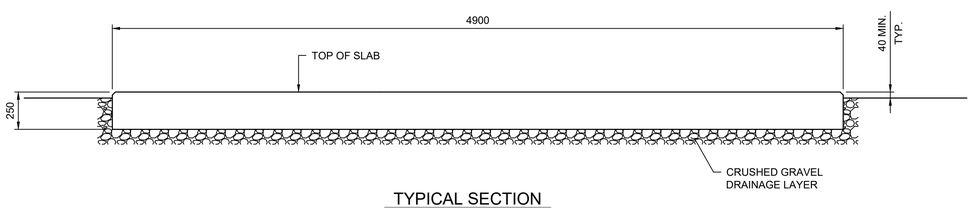

TYPICAL SECTION
SCALE 1:20

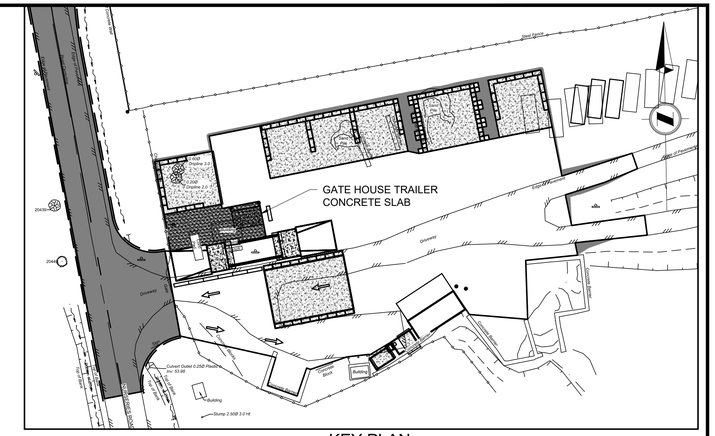

KEY PLAN
SCALE 1:500

NOTES:

1. CONDUITS, BLOCK-OUTS, AND MISCELLANEOUS STEEL EMBEDMENTS TO COME.

Rev	Date	Description	Drawn	Design	App'd
B	2025-06-13	ISSUED FOR DEVELOPMENT PERMIT	MD	WM	FP
A	2025-05-16	ISSUED FOR 100% DEVELOPMENT DESIGN	MD	WM	FP

THE UNIVERSITY OF BRITISH COLUMBIA

ORIGINAL DWG SIZE: ANSI D (22" x 34")

McElhanney
Suite 200
858 Beatty Street
Vancouver BC
Canada V6B 1C1
T 604 683 8521

PRELIMINARY
NOT FOR
CONSTRUCTION

THIS DRAWING HAS NOT BEEN APPROVED AND MAY CONTAIN ERRORS AND OMISSIONS

THE UNIVERSITY OF BRITISH COLUMBIA
6200 UNIVERSITY BLVD, VANCOUVER, BC V6T 1Z4

UBC SOUTH CAMPUS WORKS YARD
GATE HOUSE
FOUNDATION DETAILS

Drawing No.
S104

Project Number
2121-01293-00

Rev.
B

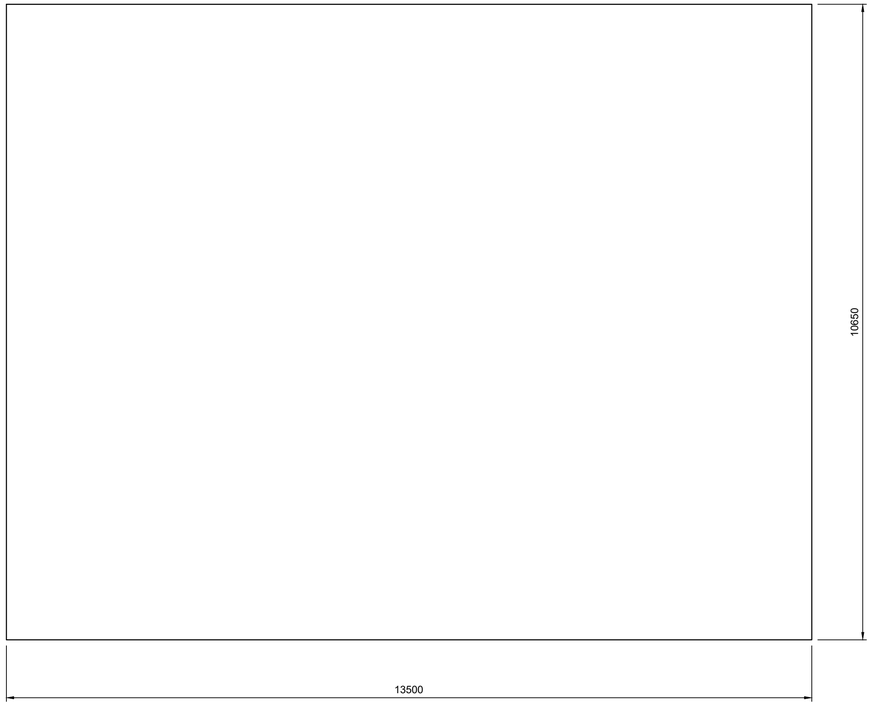

COVERED WASHBAY CONCRETE SLAB
SCALE 1:50

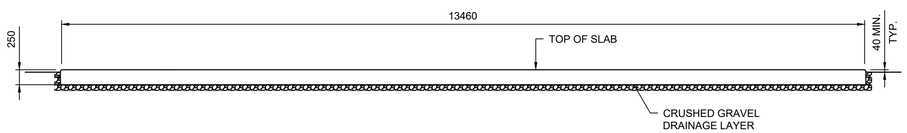

TYPICAL SECTION
SCALE 1:50

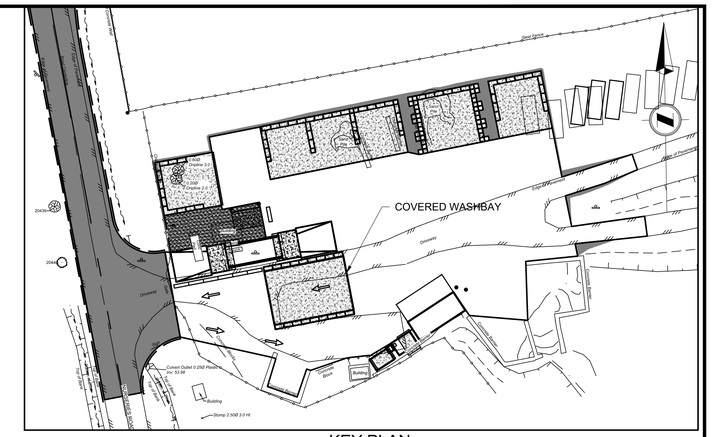

KEY PLAN
SCALE 1:500

NOTES:

1. CONDUITS, BLOCK-OUTS, AND MISCELLANEOUS STEEL EMBEDMENTS TO COME.

Rev	Date	Description	Drawn	Design	App'd
B	2025-06-13	ISSUED FOR DEVELOPMENT PERMIT	MD	WM	FP
A	2025-05-16	ISSUED FOR 100% DEVELOPMENT DESIGN	MD	WM	FP

THE UNIVERSITY OF BRITISH COLUMBIA

ORIGINAL DWG SIZE: ANSI D (22" x 34")

McElhanney
Suite 200
858 Beatty Street
Vancouver BC
Canada V6B 1C1
T 604 683 8521

PRELIMINARY
NOT FOR
CONSTRUCTION

THIS DRAWING HAS NOT BEEN APPROVED AND MAY CONTAIN ERRORS AND OMISSIONS

THE UNIVERSITY OF BRITISH COLUMBIA
6200 UNIVERSITY BLVD, VANCOUVER, BC V6T 1Z4

UBC SOUTH CAMPUS WORKS YARD WASHBAY FOUNDATION DETAILS

Drawing No.
S105

Project Number
2121-01293-00

Rev.
B

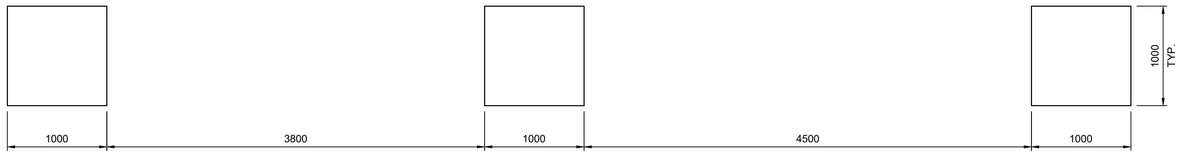

EV CHARGING STATION CONCRETE SLABS
SCALE 1:30

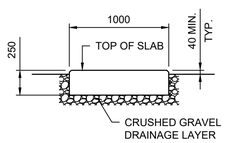

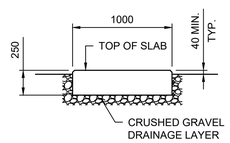

TYPICAL SECTION
SCALE 1: X

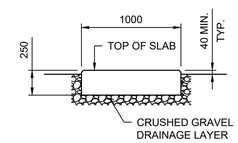

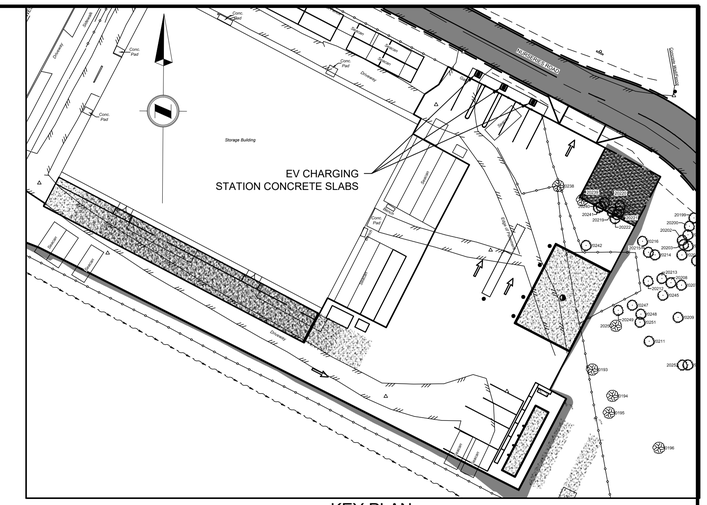

KEY PLAN
SCALE 1:500

NOTES:

1. CONDUITS, BLOCK-OUTS, AND MISCELLANEOUS STEEL EMBEDMENTS TO COME.

Rev	Date	Description	Drawn	Design	App'd
B	2025-06-13	ISSUED FOR DEVELOPMENT PERMIT	MD	WM	FP
A	2025-05-16	ISSUED FOR 100% DEVELOPMENT DESIGN	MD	WM	FP

THE UNIVERSITY OF BRITISH COLUMBIA

ORIGINAL DWG SIZE: ANSI D (22" x 34")

McElhanney
Suite 200
858 Beatty Street
Vancouver BC
Canada V6B 1C1
T 604 683 8521

PRELIMINARY
NOT FOR
CONSTRUCTION

THIS DRAWING HAS NOT BEEN APPROVED AND MAY CONTAIN ERRORS AND OMISSIONS

THE UNIVERSITY OF BRITISH COLUMBIA
6200 UNIVERSITY BLVD, VANCOUVER, BC V6T 1Z4

UBC SOUTH CAMPUS WORKS YARD
EV CHARGING STATIONS
FOUNDATION DETAILS

Drawing No.
S106

Project Number
2121-01293-00

Rev.
B

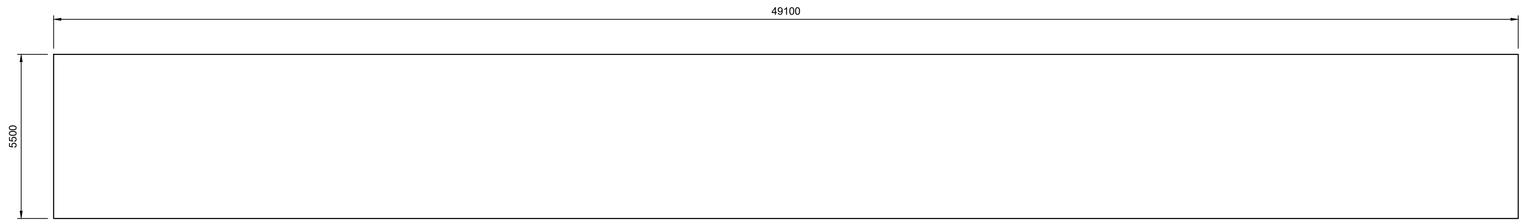

COVERED STORAGE AREA CONCRETE SLAB
SCALE 1:100

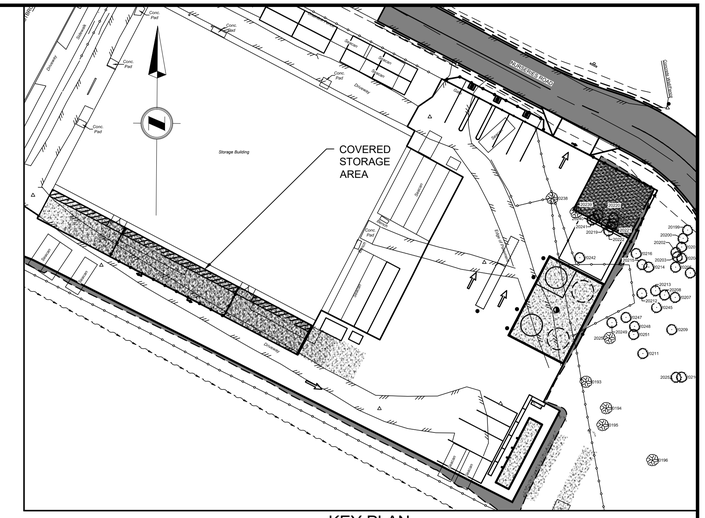

KEY PLAN
SCALE 1:500

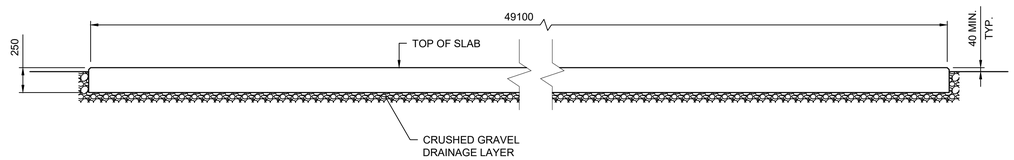

TYPICAL SECTION
SCALE 1:30

NOTES:

1. CONDUITS, BLOCK-OUTS, AND MISCELLANEOUS STEEL EMBEDMENTS TO COME.

Rev	Date	Description	Drawn	Design	App'd
B	2025-06-13	ISSUED FOR DEVELOPMENT PERMIT	MD	WM	FP
A	2025-05-16	ISSUED FOR 100% DEVELOPMENT DESIGN	MD	WM	FP

THE UNIVERSITY OF BRITISH COLUMBIA

ORIGINAL DWG SIZE: ANSI D (22" x 34")

McElhanney
Suite 200
858 Beatty Street
Vancouver BC
Canada V6B 1C1
T 604 683 8521

PRELIMINARY
NOT FOR
CONSTRUCTION

THIS DRAWING HAS NOT BEEN APPROVED AND MAY CONTAIN ERRORS AND OMISSIONS

THE UNIVERSITY OF BRITISH COLUMBIA
6200 UNIVERSITY BLVD, VANCOUVER, BC V6T 1Z4

UBC SOUTH CAMPUS WORKS YARD
COVERED STORAGE AREA
FOUNDATION DETAILS

Drawing No.
S107

Project Number
2121-01293-00

Rev.
B

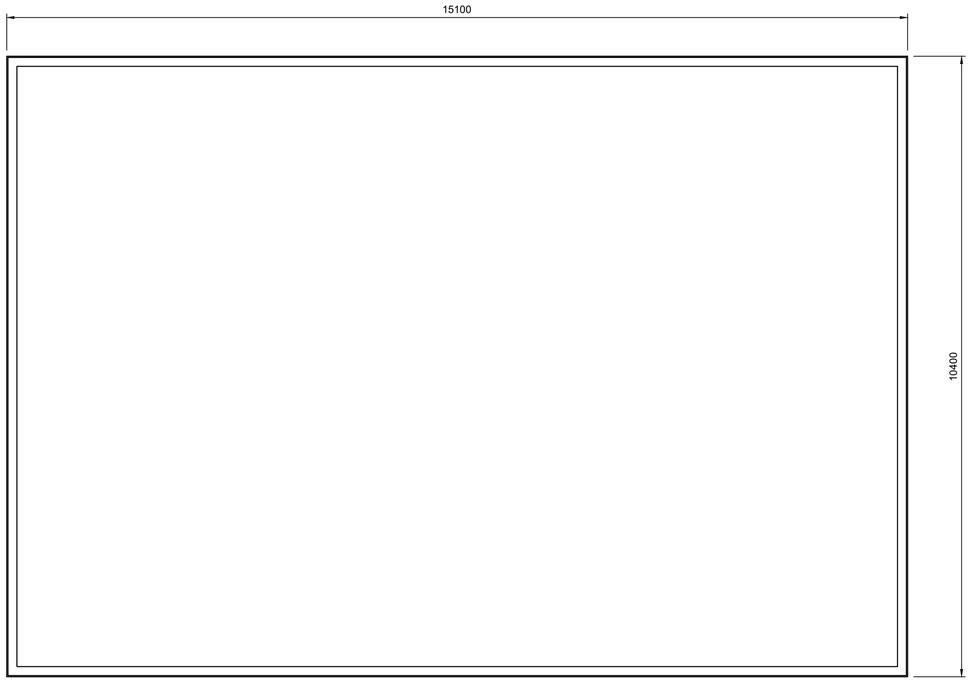

DIESEL TANK CONCRETE SLAB
SCALE 1:50

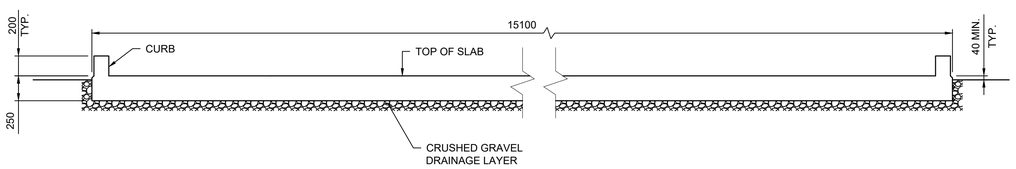

TYPICAL SECTION
SCALE 1:30

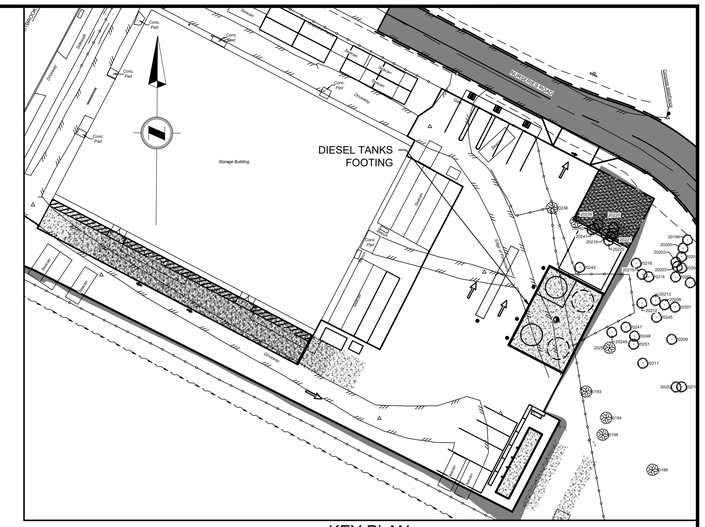

KEY PLAN
SCALE 1:500

NOTES:

1. CONDUITS, BLOCK-OUTS, AND MISCELLANEOUS STEEL EMBEDMENTS TO COME.

Rev	Date	Description	Drawn	Design	App'd
B	2025-06-13	ISSUED FOR DEVELOPMENT PERMIT	MD	WM	FP
A	2025-05-16	ISSUED FOR 100% DEVELOPMENT DESIGN	MD	WM	FP

THE UNIVERSITY OF BRITISH COLUMBIA

ORIGINAL DWG SIZE: ANSI D (22" x 34")

McElhanney
Suite 200
858 Beatty Street
Vancouver BC
Canada V6B 1C1
T 604 683 8521

PRELIMINARY
NOT FOR
CONSTRUCTION

THIS DRAWING HAS NOT BEEN APPROVED AND MAY CONTAIN ERRORS AND OMISSIONS

THE UNIVERSITY OF BRITISH COLUMBIA
6200 UNIVERSITY BLVD, VANCOUVER, BC V6T 1Z4

UBC SOUTH CAMPUS WORKS YARD DIESEL TANK FOUNDATION DETAILS

Drawing No.
S108

Project Number
2121-01293-00

Rev.
B

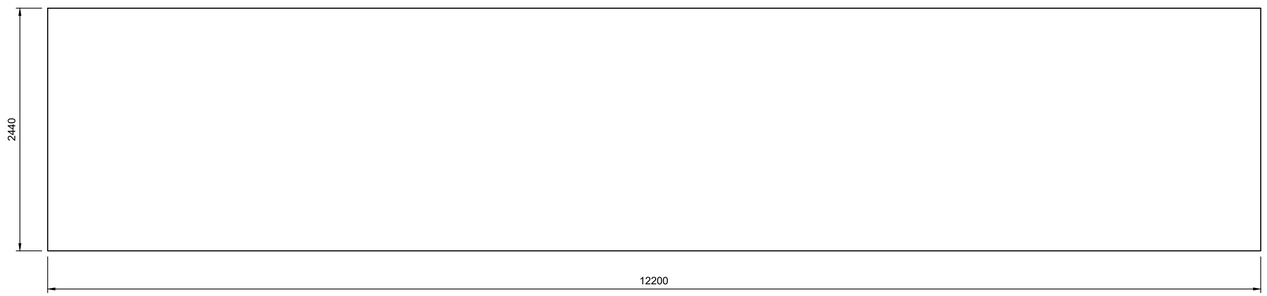

CNG STATION CONCRETE SLAB
SCALE 1:30

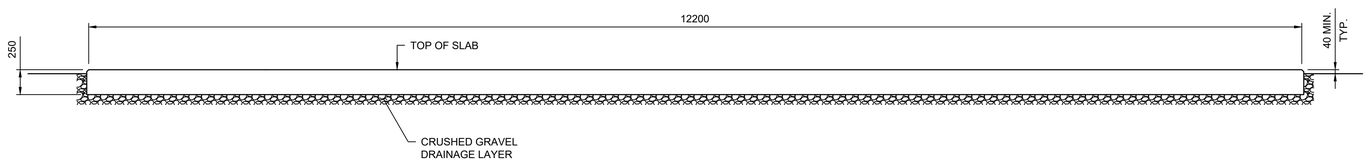

TYPICAL SECTION
SCALE 1:30

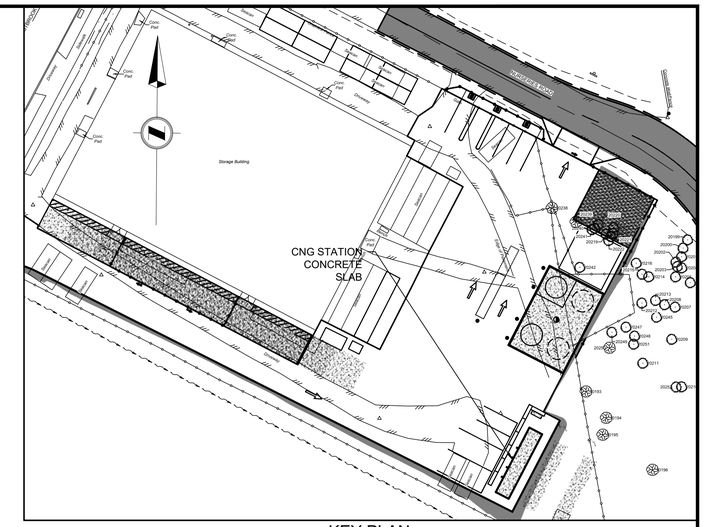

KEY PLAN
SCALE 1:500

NOTES:

1. CONDUITS, BLOCK-OUTS, AND MISCELLANEOUS STEEL EMBEDMENTS TO COME.

Rev	Date	Description	Drawn	Design	App'd
B	2025-06-13	ISSUED FOR DEVELOPMENT PERMIT	MD	WM	FP
A	2025-05-16	ISSUED FOR 100% DEVELOPMENT DESIGN	MD	WM	FP

THE UNIVERSITY OF BRITISH COLUMBIA

ORIGINAL DWG SIZE: ANSI D (22" x 34")

McElhanney
Suite 200
858 Beatty Street
Vancouver BC
Canada V6B 1C1
T 604 683 8521

PRELIMINARY
NOT FOR
CONSTRUCTION

THIS DRAWING HAS NOT BEEN APPROVED AND MAY CONTAIN ERRORS AND OMISSIONS

THE UNIVERSITY OF BRITISH COLUMBIA
6200 UNIVERSITY BLVD, VANCOUVER, BC V6T 1Z4

UBC SOUTH CAMPUS WORKS YARD CNG STATION FOUNDATION DETAILS

Drawing No.
S109

Project Number
2121-01293-00

Rev.
B